UT MORGAN CREEK STREAM RESTORATION

100 PUBLIC WORKS DRIVE, CARRBORO - ORANGE COUNTY - NORTH CAROLINA

PROJECT DIRECTORY

OWNER	TOWN OF CARBORRO
	Randy Dodd Stormwater Utility Manager 919.918.7341 rdodd@townofcarborro.org
ENGINEER	JENNINGS ENVIRONMENTAL PLLC
	Greg Jennings, PhD, PE President 919.600.4790 greg@jenningsenv.com
SURVEYOR	GSC SURVEYING
	Chuck Smith Private Group Survey Manager 804.240.1558 chuck.smith@gscsurveying.com

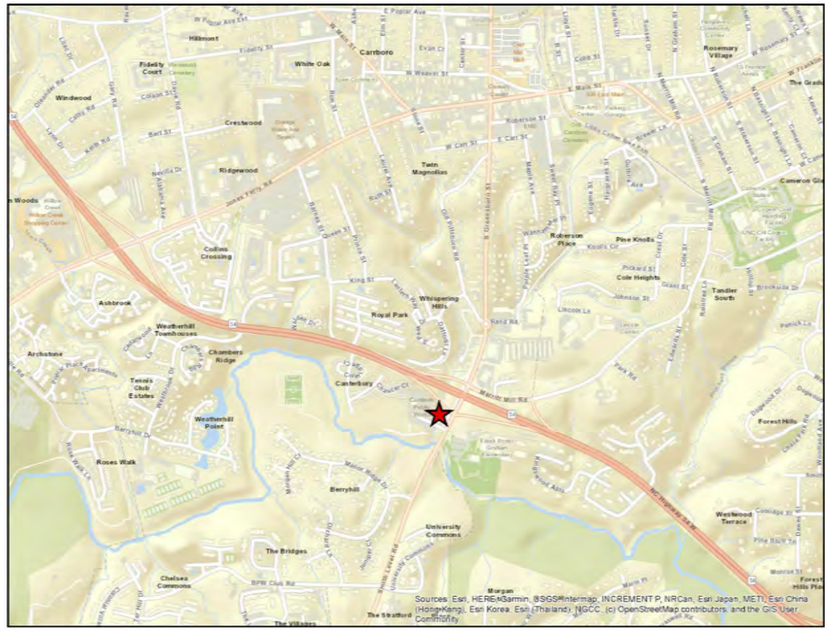

SHEET INDEX

COVER SHEET	1.1
NOTES, SPECIFICATIONS, MATERIALS	2.1 - 2.2
EROSION AND SEDIMENTATION CONTROL	3.1 - 3.4
STREAM RESTORATION PLAN AND PROFILE	4.1
STREAM RESTORATION GRADING SECTIONS	5.1 - 5.2
STREAM RESTORATION DETAILS	6.1 - 6.7
STABILIZATION AND RE-VEGETATION PLAN	7.1 - 7.2

FINAL DRAWING

MAR. 9, 2020

NORTH CAROLINA PROFESSIONAL SEAL 25454 ENGINEER GREGORY D. JENNINGS

NOT RELEASED FOR CONSTRUCTION

Jennings Environmental
7 SAMUEL ASHE DRIVE
ASHEVILLE, NC 28805
919.600.4790
NC FIRM LICENSE NO.: P-1932

UT MORGAN CREEK STREAM RESTORATION

TOWN OF CARRBORO - 100 PUBLIC WORKS DRIVE, CARRBORO, NC

COVER SHEET

FINAL DRAWING

REVISIONS
DATE: 03/09/2020
PLOT SIZE: 11" x 17"
AS NOTED
H.D.: NAD83
V.D.: NAVD88
JE PIN: 5501

1.1

GENERAL PROJECT SPECIFICATION AND NOTES

1. DEFINITIONS:
   - 1.1. CONSTRUCTION DOCUMENTS: THE CONTRACT AND APPLICABLE PLAN SHEET(S), DETAILS, SPECIFICATIONS, PERMIT(S), AND/OR ANY OTHER DOCUMENTS (MEETING MINUTES, PUNCH LISTS, BID TABS, ETC.) FOR COMPLETE INFORMATION ABOUT THE REQUIRED WORK. ANY ONE OF THESE PARTS OF THE MAY NOT CONTAIN ALL OF THE INFORMATION REQUIRED TO COMPLETE THE PROJECT WORK.
   - 1.2. PROJECT OWNER: TOWN OF CARRBORO
   - 1.3. ENGINEER: JENNINGS ENVIRONMENTAL PLLC
   - 1.4. SURVEYOR: GSC SURVEYING
2. THE WORK ON THIS PROJECT SHALL ADHERE TO THE FOLLOWING SPECIFICATIONS, STANDARDS AND/OR REGULATIONS:
   - 2.1. NC DEQ'S "EROSION AND SEDIMENT CONTROL PLANNING AND DESIGN MANUAL" (2013)
   - 2.2. NC DOT'S "2018 STANDARD PROVISIONS"
   - 2.3. NC DOT'S "2018 SPECIFICATIONS AND SPECIAL PROVISIONS"
   - 2.2. UNITED STATES ARMY CORPS OF ENGINEERS NATIONWIDE PERMIT NUMBER 13
   - 2.3. THE CONSTRUCTION DOCUMENTS
3. NOT ALL EXISTING UTILITIES ARE SHOWN. SOME LOCATIONS MAY BE ARE APPROXIMATE. THE CONTRACTOR IS RESPONSIBLE FOR ALL UTILITY LOCATION AND COORDINATION. ANY UTILITIES SHOWN ON THE CONSTRUCTION DOCUMENTS ARE FOR INFORMATIONAL PURPOSES ONLY AND IN NO WAY RELIEVES THE CONTRACTOR FROM COORDINATING, VERIFYING AND PROTECTING EXISTING UTILITIES. ALL UTILITIES SHALL BE PROTECTED AND REMAIN ACTIVE UNLESS OTHERWISE NOTED.
4. THE CONTRACTOR IS RESPONSIBLE FOR THE WORK AREA UNTIL COMPLETION AND FINAL ACCEPTANCE BY THE TOWN AND ENGINEER. THE CONTRACTOR SHALL TAKE ALL PRECAUTIONS NECESSARY AND SHALL BEAR ALL RISK OF LOSS OR DAMAGE. THE CONTRACTOR WILL FURNISH ALL NECESSARY EQUIPMENT, TOOLS, LABOR, TRANSPORTATION, AND SUPERVISION TO CLEAR THE RIGHT-OF-WAY ACCORDING TO THESE SPECIFICATIONS AND APPLICABLE FEDERAL, STATE AND LOCAL LAWS AND REGULATIONS. THE CONTRACTOR SHALL CONFINE ALL ACTIVITIES, INCLUDING EQUIPMENT STORAGE, TO THE LIMITS OF DISTURBANCE, STAGING AREAS, AND DESIGNATED CONSTRUCTION ACCESS POINTS.
5. THE MANNER IN WHICH THE CONTRACTOR DEALS WITH PEOPLE AND THEIR PROPERTIES WHILE PERFORMING THIS WORK IS EXTREMELY IMPORTANT TO THE TOWN AND ENGINEER. THEREFORE, THE CONTRACTOR AND THE CONTRACTOR'S REPRESENTATIVES SHALL MANIFEST A SPIRIT OF FRIENDLINESS AND COOPERATION WHEN DEALING WITH PROPERTY OWNERS AND THE GENERAL PUBLIC WHILE PERFORMING WORK UNDER THIS SPECIFICATION.
6. EXTREME CARE AND DILIGENCE SHALL BE EXERCISED BY THE CONTRACTOR TO ASSURE THE SAFETY OF PERSONS, ANIMALS, AND PROPERTY. IF AT ANY TIME THE TOWN OR ENGINEER DETERMINES THAT THE CONTRACTOR'S METHODS OR EQUIPMENT ARE INADEQUATE FOR SECURING THE SAFETY OF THE CONTRACTOR'S EMPLOYEES OR THE PUBLIC, THE DESIGNATED REPRESENTATIVE MAY DIRECT THE CONTRACTOR TO TAKE SPECIFIC ACTIONS TO ENSURE SAFETY. THE CONTRACTOR SHALL IMPROVE METHODS AS DEEMED APPROPRIATE BY THE DESIGNATED REPRESENTATIVE WITHOUT ADDITIONAL COST TO THE TOWN, SO AS TO ASSURE COMPLIANCE WITH THE TOWN OR ENGINEER'S SAFETY CONCERNS. FAILURE OF THE DESIGNATED REPRESENTATIVE TO MAKE THIS DEMAND SHALL NOT RELIEVE THE CONTRACTOR OF ANY OBLIGATION TO ENSURE THE SAFE CONDUCT OF ITS WORK.
7. THE CONTRACTOR SHALL MAINTAIN ALL LIGHTS, GUARDS, SIGNS, TEMPORARY PASSAGES, OR OTHER PRECAUTIONS NECESSARY FOR THE SAFETY OF ALL PERSONS. THE CONTRACTOR SHALL ABIDE BY ALL SAFETY RULES AND CONSTRUCTION CONDITIONS REQUIRED BY GOVERNMENTAL AUTHORITIES AND OTHER ENTITIES, INCLUDING RAILROADS, SO THE PUBLIC IS SAFEGUARDED FROM ACCIDENTS AND DELAYS. GUARDS AND FLAGS REQUIRED BY GOVERNMENTAL OR RAILROAD AUTHORITIES SHALL BE PROVIDED AT THE CONTRACTOR'S EXPENSE, UNLESS DIRECTED OTHERWISE BY THE DESIGNATED REPRESENTATIVE. CONTRACTOR SHALL AT NO TIME COMPROMISE EITHER SAFETY OR ENVIRONMENTAL REQUIREMENTS.
8. ANY ALTERNATE ACCESS PLANNED BY THE CONTRACTOR SHALL BE APPROVED BY THE TOWN AND ENGINEER PRIOR TO USE.
9. SITE SHOULD BE "STORM READY" AT THE END OF EACH WORK DAY AND WORK WEEK.

TOPOGRAPHIC SPECIFICATIONS AND NOTES

10. ELECTRONIC SURVEY DATA, BASE DRAWINGS AND SITE DATA WERE CURATED BY GSC SURVEYING USING LOCAL, STATE AND FEDERAL GIS RESOURCES, AND FIELD DATA COLLECTION ONSITE.
11. HORIZONTAL DATUM IS NAD83(2011) . VERTICAL DATUM IS NAVD88. ALL COORDINATES ARE BASED ON NAD83(2011) AND ALL ELEVATIONS ARE BASED ON NAVD88.
12. EXISTING GROUND SURFACES ARE BASED ON THE GSC SURVEYING TOPOGRAPHIC SURFACE PRODUCED IN AUGUST 2019. SOME TOPOGRAPHIC CHANGES MAY HAVE OCCURRED SINCE THE SURVEY WAS COMPLETED, PARTICULARLY IN AREAS EXPERIENCING CHANNEL DEGRADATION AND BANK EROSION OR DENSE TREE COVER.
13. THE PROPOSED ELEVATIONS AND GRADES SHOWN HEREIN ARE BASED ON THE GSC SURVEY THAT ENCOMPASSES THE EXISTING GROUND SURFACE FROM WHICH ALL COMPUTATIONS OF CUT AND FILL ARE BASED. SLIGHT DISCREPANCIES BETWEEN THE EXITING GROUND AND DIGITAL SURFACE AND FIELD CONDITIONS CAN RESULT IN VARIATIONS OF TOTAL EXCAVATED QUANTITIES. THUS, QUANTITIES OF MATERIAL EXCAVATED SHOULD BE COMPARED TO THOSE SHOWN ON THE PLANSHEETS TO MANAGE THE MOVEMENT OF MATERIAL ACROSS THE SITE.

STREAM RESTORATION SPECIFICATIONS AND NOTES

14. FIELD CONDITIONS AND PROJECT VARIABILITY MAY REQUIRE ADAPTATION OF THE PLANSHEETS AND/OR DETAILS PROVIDED IN THE CONSTRUCTION DOCUMENTS DEPENDING ON SITE CONDITIONS OR PROJECT NEEDS. MINOR VARIATION(S) OR ADAPTATION(S) OF THE PROPOSED WORK SHOWN ON THE PLANSHEETS AND/OR DETAILS ARE CONSIDERED INCIDENTAL TO THE WORK.
15. PRIOR TO CLEARING AND GRUBBING, THE CONTRACTOR SHALL MARK THE LIMITS OF CLEARING NEAR TREES FOR VERIFICATION OF INTENT BY THE ENGINEER. SOME MINOR ADJUSTMENT OF CHANNEL ALIGNMENT MAY BE REQUIRED TO PRESERVE TREES OR MINIMIZE IMPACT TO TREES AND EXISTING VEGETATION.
16. THE CONTRACTOR SHALL STAKE OUT THE PROPOSED STREAM CENTERLINE USING TRADITIONAL SURVEY METHODS OR SURVEY GRADE GPS EQUIPMENT FOR REVIEW BY THE ENGINEER BEFORE BEGINNING EXCAVATION AND GRADING. STAKING MAY BE OMITTED FOR PORTIONS OF THE STREAM WHEN SURVEY-GRADE GPS IS USED TO CONSTRUCT THE CHANNEL.
17. WHERE PRACTICABLE, EXISTING TREES AND VEGETATION SHOULD BE LEFT IN PLACE TO FACILITATE NATURAL REGENERATION AND SOIL STABILIZATION.
18. CONTRACTOR SHALL MINIMIZE, TO THE MAXIMUM EXTENT POSSIBLE, IMPACTS TO THE TREES AND EXISTING VEGETATION ADJACENT TO THE WORK AREA.
19. CONSTRUCTION EQUIPMENT TRACKS AND ACCESS PATHS SHALL BE GRADED AND RE-CONTOURED AFTER CONSTRUCTION TO PREVENT RILL AND GULLY EROSION.
20. CONTRACTOR SHALL USE AN EXCAVATOR WITH A HYDRAULIC THUMB TO INSTALL IN-STREAM STRUCTURES.
21. EXCAVATION AND GRADING QUANTITIES DO NOT INCLUDE UNDERCUT EXCAVATION FOR IN-STREAM STRUCTURES LIKE RIFFLES, CROSS-VANES AND BOULDER WALLS.
22. STREAM RESTORATION WORK SHALL BE IMPLEMENTED BY FIRST GRADING THE BANKFULL BENCH ADJACENT TO THE CHANNEL TO THE ELEVATIONS AND GRADES SPECIFIED IN THE PLANSHEETS. THE PROPOSED STREAM CHANNEL SHALL THEN BE EXCAVATED TO THE CHANNEL CROSS-SECTION GEOMETRY AND LONGITUDINAL PROFILE IN THE CONSTRUCTION DOCUMENTS. THIS CHANNEL WORK SHALL BE DONE WITH LOW GROUND PRESSURE TRACK EQUIPMENT AND IN DRY WORKING CONDITIONS. PLANSHEETS PROVIDE DIMENSIONS, ELEVATIONS AND SLOPES TO AID IN CONSTRUCTION OF THE CHANNEL. THE THALWEG CAN FIRST BE EXCAVATED TO THE ELEVATION SPECIFIED IN THE LONGITUDINAL PROFILE AND FINE GRADING OF THE CROSS-SECTIONS SHALL THEN BE PREFORMED. ANY TEMPORARY STOCKPILING OR DOUBLE HANDLING OF EXCESS EARTH NECESSARY TO BUILD THE CHANNEL SHALL BE CONSIDERED INCIDENTAL TO CONSTRUCTION.
23. BANKFULL CHANNEL DIMENSIONS WILL BE HELD TO THE DIMENSIONS SHOWN ON THE TYPICAL CROSS-SECTION PLANSHEETS. ELEVATIONS SHALL BE CONSTRUCTED WITHIN 0.1' (VERTICAL). WIDTHS AND DEPTHS MUST FALL WITHIN RANGES SHOWN IN THE PLANSHEETS. CHANNEL CROSS-SECTION DIMENSIONS SHALL BE WITHIN 0.2' (HORIZONTAL).
24. IF THE EXISTING GROUND IS LESS THAN 0.2' HIGHER THAN THE PROPOSED BANKFULL ELEVATION, IT IS NOT NECESSARY TO EXCAVATE TO THE PROPOSED ELEVATIONS AND GRADES IN THE CONSTRUCTION DOCUMENTS.
25. IN-STREAM STRUCTURES SHALL BE INSTALLED AS THE CHANNEL IS BEING CONSTRUCTED. IN-STREAM STRUCTURES SHALL BE FINISHED TO A SMOOTH SURFACE IN ACCORDANCE WITH THE LINES, GRADES AND ELEVATIONS SHOWN IN THE CONSTRUCTION DOCUMENTS. THE FINISHED STRUCTURE SLOPES AND PROFILE ELEVATIONS SHALL BE WITHIN 0.1' (VERTICAL) OF THE CONSTRUCTION DOCUMENTS.
26. ALL FILTER FABRIC INSTALLED AS PART OF THE IN-STREAM STRUCTURE SHALL BE A NON-WOVEN GEOTEXTILE UNLESS OTHERWISE SPECIFIED IN STRUCTURE DETAILS OR SPECIFICATIONS. FILTER FABRIC SHALL BE TRIMMED TIGHT TO THE SURFACE OF THE STRUCTURE AND SHOULD NOT BE OBSERVED BY VISUAL INSPECTION.
27. BOULDER STRUCTURES SHALL BE CONSTRUCTED FROM BOULDERS THAT ARE CUBICAL OR RECTANGULAR IN SHAPE AND SIZED ACCORDING TO THE STRUCTURE DETAILS.
28. AFTER THE STRUCTURE IS COMPLETE AND FLOW IS RESTORED TO THE CHANNEL, SOME ADJUSTMENT TO THE STRUCTURE OR ADDITIONAL STABILIZATION MEASURE MAY BE NECESSARY TO ACHIEVE THE DESIRED FUNCTION.
26. CHANNEL WORK SHALL BE COMPLETED AND STABILIZED PRIOR TO ALLOWING FLOW TO ENTER INTO THE NEWLY CONSTRUCTED STREAM CHANNEL.
27. THE CONSTRUCTED CHANNEL SHALL BE STABILIZED AS SOON AS POSSIBLE BY TEMPORARY AND PERMANENT SEEDING, ADDING STRAW MULCH TO BARE SOIL AND INSTALLING EROSION CONTROL MATTING FROM THE TOE OF THE BANKFULL CHANNEL TO 4' BEYOND THE BANKFULL STAGE. PRIOR TO INSTALLING THE EROSION CONTROL MATTING, PREPARE THE SOIL SURFACE BY LOOSENING 2 - 4" OF SOIL OR APPLYING 2 - 4" OF TOPSOIL TO THE PROPOSED ELEVATIONS AND APPLY SEED AND THEN STRAW MULCH. SEED SHALL BE BROADCAST EVENLY OF THE AREA USING A BROADCAST SPREADER PRIOR TO COVERING WITH THE EROSION CONTROL MATTING. THE MATTING SHALL BE ROLLED OUT IN THE DIRECTION OF ANTICIPATED RUNOFF FLOW. INSTALL MATTING IN ACCORDANCE WITH THE DETAIL INCLUDED IN THE CONSTRUCTION DOCUMENTS. REWORKING OF AREAS THAT DO NOT ESTABLISH VEGETATION OR BECOME UNSTABLE SHALL BE NECESSARY IN THE MATTING SEPARATES FROM THE SOIL.
28. THE HARVESTING AND INSTALLATION OF LIVE STAKES AND CUTTINGS SHALL BE PREFORMED ONLY DURING THE DORMANT SEASON, TYPICALLY BETWEEN DECEMBER 1 AND MARCH 1. THE CONTRACTOR SHALL NOTIFY THE TOWN AND ENGINEER 7 DAYS PRIOR TO HARVESTING TO REVIEW AND APPROVE ALL HARVESTING SITES AND SPECIES.
29. LIVE STAKES AND BARE ROOTS SHALL BE INSTALLED BELOW THE BANKFULL STAGE TO THE BASE FLOW WATER SURFACE IN THE CHANNEL. LIVE STAKES SHALL BE INSTALLED THROUGH THE EROSION CONTROL MATTING TO A DEPTH THAT REACHES THE WATER TABLE.

Jennings Environmental
7 SAMUEL ASHE DRIVE
ASHEVILLE, NC 28805
919.600.4790
NC FIRM LICENSE NO.: P-1932

UT MORGAN CREEK STREAM RESTORATION
TOWN OF CARRBORO - 100 PUBLIC WORKS DRIVE, CARRBORO, NC

PROJECT NOTES AND SPECIFICATIONS

FINAL DRAWING

REVISIONS
DATE: 03/09/2020
PLOT SIZE: 11" x 17"
NTS
H.D.: NAD83
V.D.: NAVD88
JE PIN: 5501

2.1

QUANTITIES AND MATERIALS SPECIFICATIONS

1. THE CONTRACTOR SHALL FURNISH ALL MATERIALS NECESSARY TO COMPLETE THE PROPOSED WORK UNLESS OTHER PROVISIONS HAVE BEEN AGREED UPON PRIOR TO CONSTRUCTION. THE CONTRACTOR SHALL DELIVER ALL MATERIALS TO THE DESIGNATED ACCESS POINTS AND STAGING AREAS OR TO A LOCATION SPECIFIED BY THE TOWN OR ENGINEER. MATERIAL QUANTITIES. DIMENSIONS AND SIZES SHALL CONFORM TO THE NOTES AND SPECIFICATIONS PROVIDED IN THE CONSTRUCTION DOCUMENTS OR ON THE QUANTITIES AND MATERIALS LIST. THE ENGINEER MAY INSPECT AND APPROVE ALL MATERIALS PRIOR TO CONSTRUCTION. IF MATERIALS DO NOT MEET THE MINIMUM REQUIREMENTS SPECIFIED IN THE CONSTRUCTION DOCUMENTS, THE ENGINEER SHALL REJECT THE MATERIALS.
2. COSTS INCURRED DUE TO PROJECT DELAYS RESULTING FROM FAILURE OF THE CONTRACTOR TO MEET THE REQUIREMENTS OF THE CONSTRUCTION DOCUMENTS, SHALL BE THE EXPENSE OF THE CONTRACTOR. QUANTITIES LISTED ARE ESTIMATES ONLY AND SHALL BE CONFIRMED BY THE CONTRACTOR.
3. THE EROSION CONTROL MEASURES DEPICTED ON THE PLANS ARE TO BE INSTALLED AS NEEDED TO KEEP ALL SEDIMENT ON SITE AND OUT OF STREAMS AND WETLANDS. ADDITIONAL EROSION CONTROL MEASURES (ABOVE THOSE SHOWN ON THE PLANS AND ON THE QUANTITIES AND MATERIALS LIST) MAY BE REQUIRED IN ORDER TO KEEP ALL SEDIMENT ON SITE AND OUT OF STREAMS AND WETLANDS. THE CONTRACTOR SHALL OBTAIN APPROVAL FROM THE ENGINEER AND THE TOWN PRIOR TO INSTALLATION OF ADDITIONAL EROSION CONTROL MEASURES.
4. ANY ADDITIONAL GRADING OTHER THAN WHAT IS SHOWN ON THE PLANS SHALL REQUIRE PRIOR APPROVAL FROM THE ENGINEER. ANY ADDITIONAL AREAS OF DISTURBANCE (CHANGES IN ACCESS, GRADING, CLEARING, ETC.) WILL REQUIRE APPROVAL FROM THE ENGINEER AND THE TOWN.
5. THE USE OF ANY BRAND NAMES/MANUFACTURERS OR MODELS IS INTENDED SOLELY TO DENOTE THE QUALITY STANDARD OF THE DESIRED PRODUCT. ANY USE OF BRAND NAMES IS NOT INTENDED TO RESTRICT BIDDERS TO A SPECIFIC BRAND, MAKE, MANUFACTURER, OR NAME. THE BRAND NAMES / MANUFACTURERS OF MODELS ARE INTENDED TO CONVEY THE GENERAL STYLE, TYPE, CHARACTER, AND QUALITY OF PRODUCT. EQUIVALENT PRODUCTS WILL BE ACCEPTABLE IF THE ENGINEER HAS GIVEN APPROVAL OF THE SPECIFIC PRODUCT IN WRITING.
6. THE CONTRACTOR SHALL BE RESPONSIBLE FOR LOCATING AND PROVIDING STORAGE AREAS FOR CONSTRUCTION MATERIALS AND EQUIPMENT. THE MATERIAL AND EQUIPMENT STORAGE SHALL COMPLY WITH THE CONSTRUCTION DOCUMENTS AND ALL TOWN, LOCAL, STATE AND FEDERAL REGULATIONS THROUGHOUT THE CONSTRUCTION PERIOD. THE CONTRACTOR SHALL RESTORE THE STAGING AREAS AND STORAGE AREAS TO ITS ORIGINAL (OR BETTER) CONDITION UPON COMPLETION OF THE PROJECT OR UPON SUCH TIME AS DIRECTED BY THE TOWN. SUCH RESTORATION SHALL BE AT NO ADDITIONAL COST TO THE TOWN. THE CONTRACTOR SHALL BE RESPONSIBLE FOR THE SAFEGUARDING OF MATERIALS AND EQUIPMENT AGAINST FIRE, THEFT AND VANDALISM AND SHALL NOT HOLD THE PROJECT RESPONSIBLE IN ANY WAY FOR THE OCCURRENCES OF SAME. FOR MATERIALS AND EQUIPMENT STORAGE AREAS THE CONTRACTOR SHALL FURNISH AND ERECT, AT NO ADDITIONAL COST, WHATEVER WORKS MAY BE NECESSARY FOR THE PROTECTION OF THE PUBLIC, INCLUDING BUT NOT LIMITED TO BARRICADES, FENCES, ETC. PRIOR TO FINAL PAYMENT BEING MADE, THE CONTRACTOR SHALL OBTAIN A RELEASE FROM THE PROPERTY OWNER OF THE STORAGE AREA UTILIZED FOR THE PROJECT.
7. THE CONTRACTOR SHALL ESTABLISH, PROVIDE AND MAINTAIN AN EFFECTIVE QUALITY CONTROL PROGRAM THAT DETAILS THE METHODS AND PROCEDURES TO BE TAKEN TO ASSURE THAT ALL MATERIALS AND COMPLETED WORK, REQUIRED FOR THE PROJECT, CONFORM TO THE CONSTRUCTION DOCUMENTS. ALTHOUGH GUIDELINES ARE ESTABLISHED AND CERTAIN MINIMUM REQUIREMENTS ARE SPECIFIED HEREIN AND ELSEWHERE IN THE CONSTRUCTION DOCUMENTS, THE CONTRACTOR IS FULLY RESPONSIBLE FOR DEVELOPING AND EXECUTING THEIR OWN QUALITY CONTROL PROGRAM. THE CONTRACTOR SHALL PERFORM INSPECTION, TESTING, AND MEASUREMENT OF ALL ITEMS OF WORK REQUIRED BY THE CONSTRUCTION DOCUMENTS AND TECHNICAL SPECIFICATIONS, INCLUDING THOSE PERFORMED BY SUBCONTRACTORS. REVIEW OF THE MATERIALS AND COMPLETED WORK BY THE TOWN AND ENGINEER DOES NOT RELIEVE THE CONTRACTOR OF PERFORMING QUALITY CONTROL INSPECTIONS/REVIEW OF THE CONTRACTOR'S AND/OR SUBCONTRACTOR'S WORK.
8. THE CONTRACTOR SHALL WARRANTY ALL MATERIALS AND WORKMANSHIP FOR A PERIOD OF ONE (1) YEAR FROM THE DATE OF ACCEPTANCE OF BY THE TOWN AND SHALL REPLACE ANY PORTIONS THAT FAIL DUE TO FAULTY MATERIALS OR WORKMANSHIP, AT NO ADDITIONAL COST TO THE TOWN. A SIX (6) MONTH AND ELEVEN (11) MONTH INSPECTION WILL BE PERFORMED DURING THE WARRANTY PERIOD. THE CONTRACTOR SHALL IMMEDIATELY REPAIR ALL ITEMS DETERMINED BY THE TOWN OR AUTHORIZED REPRESENTATIVE TO BE DEFECTIVE UPON NOTIFICATION. THE CONTRACTOR SHALL IMMEDIATELY REPAIR OR REPLACE FAILED ITEMS UPON NOTIFICATION BY THE PROJECT OWNER. SEASONALLY INSTALLED ITEMS SHALL BE REPAIRED OR REPLACED DURING THE NEXT AVAILABLE INSTALLATION PERIOD. ITEMS REPAIRED OR REPLACED UNDER THIS PROVISION SHALL HAVE AN ADDITIONAL ONE (1) YEAR WARRANTY PERIOD FROM THE NEW DATE OF ACCEPTANCE. AREAS AND/OR OTHER WORK DISTURBED WHILE ACCESSING AND/OR REPAIRING/REPLACING WARRANTY COVERED ITEMS SHALL BE STABILIZED.

UT MORGAN CREEK STREAM RESTORATION

MATERIALS AND WORK QUANTITIES

PSP#	DESCRIPTION	QTY	UNIT
EROSION AND SEDIMENTATION CONTROL			
TBD	POLE BARN DEMOLITION	1	LS
2.1	CHAIN LINK FENCE DEMOLITION	70	LF
2.2	CLEARING AND GRUBBING	0.14	AC
2.3	SIGNIFICANT TREE REMOVAL (12" - 24" DBH)	7	EA
2.4	TEMPORARY CONSTRUCTION ENTRANCE	1	EA
2.5	CONSTUCTION SAFETY FENCE	220	LF
2.6	TEMPORARY PUMP AROUND SYSTEM	1	LS
GRADING AND EARTHWORK			
3.1	STREAM CHANNEL AND FLOODPLAIN EXCAVATION (APPROX. 200 CY)	1	LS
STREAM RESTOTRATION			
4.1	BOULDER RIFFLE	1	EA
4.2	BOULDER CROSS VANE	3	EA
4.3	POOL STABILIZATION	60	TN
4.4	BOULDER WALL	80	LF
4.5	BOULDER WALL WITH GEOLIFT	75	LF
STABILIZATION AND VEGETATION			
5.1	FLEXAMAT (OR EQUIV.)	130	SY
5.2	EROSION CONTROL MATTING - COIR 700G	550	SY
5.3	TEMPORARY SEEDING	680	SY
5.4	PERMANENT SEEDING	680	SY
5.5	PLANTINGS	350	STEMS
FINISH, REPAIR AND REPLACE			
6.1	CHAIN LINK FENCE INSTALLATION	70	LF

STANDARD LINES AND SYMBOLS

PARCEL BOUNDARY

315 EXISTING MAJOR CONTOUR

314 EXISTING MINOR CONTOUR

X EXISTING CHAIN LINK FENCE

EXISTING SIGNIFICANT TREE (>12" DBH)

LOD LIMITS OF DISTURBANCE (LOD)

CF CONSTRUCTION SAFETY FENCE

P TEMPORARY PUMP AROUND

CONSTRUCTION ENTRANCE / RAMP

TEMPORARY STAGING AREA

315 PROPOSED MAJOR CONTOUR

314 PROPOSED MINOR CONTOUR

PROPOSED CHANNEL CENTERLINE

PROPOSED BANKFULL

PROPOSED GRADING LIMITS

PROPOSED STACKED BOULDER WALL

PROPOSED BOULDER CROSS-VANE

PROPOSED BOULDER RIFFLE

FLEXAMAT SLOPE STABILIZATION

EROSION CONTROL MATTING AND RIPARIAN RE-VEGETATION

NORTH CAROLINA PROFESSIONAL SEAL 25454 ENGINEER GREGORY D. JENNINGS

Jennings Environmental
7 SAMUEL ASHE DRIVE
ASHEVILLE, NC 28805
919.600.4790
NC FIRM LICENSE NO.: P-1932

UT MORGAN CREEK STREAM RESTORATION

TOWN OF CARRBORO - 100 PUBLIC WORKS DRIVE, CARRBORO, NC

PROJECT MATERIALS AND QUANTITIES

FINAL DRAWING

REVISIONS
DATE: 03/09/2020
PLOT SIZE: 11" x 17"
NTS
H.D.: NAD83
V.D.: NAVD88
JE PIN: 5501

2.2

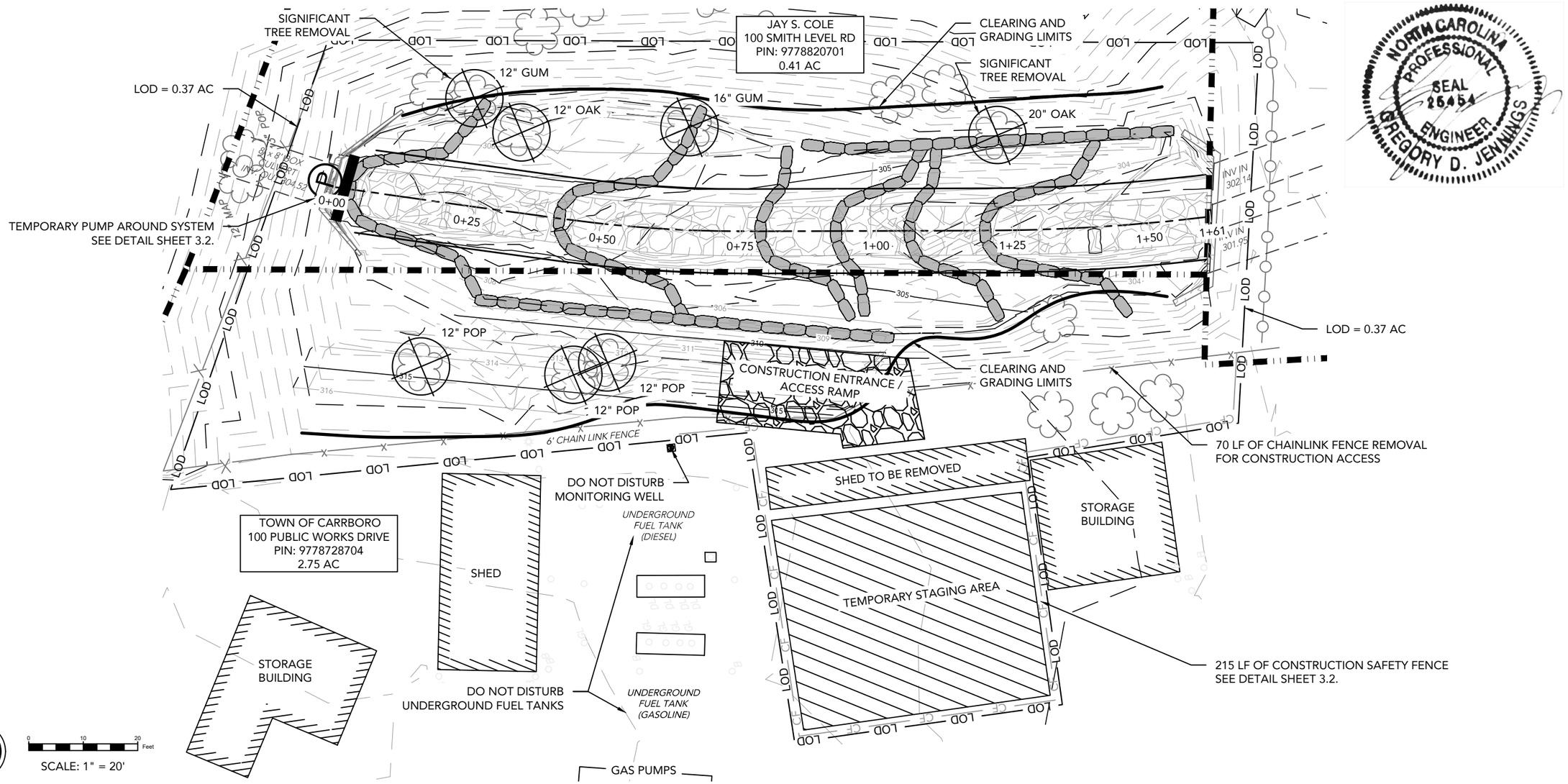

EROSION AND SEDIMENTATION CONTROL NOTES

1. THE TOTAL LOD OF THE PROPOSED STREAM RESTORATION PROJECT IS 0.37 AC. THE CONTRACTOR SHALL KNOW AND UNDERSTAND THE PROJECT EXTENTS AND LOD BEFORE STARTING CONSTRUCTION.
2. HARD COPIES OF ALL APPLICABLE PERMITS SHALL BE KEPT ON-SITE IN THE PERMITS BOX OR POST ON SITE. ANY PROJECT REVISIONS THAT RESULT IN ADDITIONAL LAND DISTURBANCE OR CHANGE IN DRAINAGE PATTERNS SHALL BE SUBMITTED TO THE TOWN STAFF FOR APPROVAL.
3. PRIOR TO BEGINNING CONSTRUCTION, THE CONTRACTOR SHALL NOTIFY THE TOWN (919.918.7426) 48 HOURS IN ADVANCE TO SCHEDULE AN ON-SITE PRE-CONSTRUCTION MEETING WITH THE ENGINEER AND TOWN STAFF.
4. NO LAND DISTURBING ACTIVITIES SHALL TAKE PLACE OUTSIDE THE LOD WITHOUT TOWN APPROVAL.
5. SENSITIVE AREAS INCLUDING WETLANDS, STREAMS, RARE PLANTS, AND ARCHAEOLOGICAL SITES, UNDERGROUND STORAGE TANKS AND UTILITIES SHOULD BE MARKED IN BLUE FLAGGING PRIOR TO START OF CLEARING/CONSTRUCTION.
6. NO DEMOLITION, CONSTRUCTION, OR LAND DISTURBANCE ACTIVITIES SHALL BEGIN UNTIL ALL APPLICABLE EROSION CONTROL MEASURES HAVE BEEN INSTALLED. IF CLEARING IS REQUIRED FOR INSTALLATION OF A GIVEN MEASURE, ALL OTHER MEASURES SHALL BE INSTALLED FIRST. LAND DISTURBANCE ACTIVITIES REQUIRED FOR INSTALLATION OF THE GIVEN MEASURE MAY THEN PROCEED.
7. UTILITIES ARE SHOWN IN APPROXIMATE MANNER ONLY. CONTRACTOR SHALL VERIFY LOCATION AND ELEVATION OF EXISTING UTILITIES PRIOR TO BEGINNING DEMOLITION, CONSTRUCTION OR LAND DISTURBING ACTIVITIES.
8. THE EXISTING SHED (AND EQUIPMENT) WILL BE REMOVED, EITHER BY THE TOWN PRIOR TO CONSTRUCTION, OR BY THE CONTRACTOR AS THE FIRST STEP DURING CONSTRUCTION.
9. A TEMPORARY STAGING AREA SHALL BE ESTABLISHED ON THE EXISTING GRAVEL PAD WEST OF THE STREAM. THE TOWN WILL REMOVED THE EXISTING SHED AND EQUIPMENT PRIOR TO CONSTRUCTION. CONSTRUCTION MATERIALS AND EQUIPMENT SHALL BE STORED AND / OR STAGED IN THE DESIGNATED STAGING AREA SHOWN ON THE APPROVED E&SC PLAN.
10. CONSTRUCTION SAFETY FENCE SHALL BE INSTALLED AT THE BOUNDARY OF THE STAGING AREA TO DETER PEDESTRIAN ACCESS TO THE SITE.
11. A CONSTRUCTION ENTRANCE / ACCESS RAMP SHALL BE INSTALLED FROM THE TEMPORARY STAGING ARE TO THE WORK AREA TO EFFICIENTLY MOVE EQUIPMENT AND MATERIALS.
12. ALL CHANNEL AND STABILIZATION WORK SHALL OCCUR IN DRY WORKING CONDITIONS. A TEMPORARY PUMP AROUND SYSTEM SHALL BE UTILIZED TO MAINTAIN DRY WORKING CONDITIONS.
13. SILT FENCE OR WATTLES SHALL BE USED ON AN AS NEEDED BASIS.
14. THE WORK SITE SHALL BE "STORM READY" AT THE END OF EACH WORK DAY. AT NO ADDITIONAL COST TO THE TOWN.
15. ALL E&SC MEASURES SHALL BE IMPLEMENTED ACCORDING TO THE NCDEQ EROSION AND SEDIMENT CONTROL PLANNING AND DESIGN MANUAL (2013).
16. ADDITIONAL E&SC MEASURES MAY BE REQUIRED TO KEEP ALL SEDIMENT FROM ENTERING SURFACE WATERS AT NO ADDITIONAL COST TO THE TOWN.

CONSTRUCTION SEQUENCE

1. HOLD ONSITE PRE-CONSTRUCTION MEETING WITH THE ENGINEER AND TOWN STAFF.
2. FLAG THE WORK LIMITS AND STAKE OUT THE EXTENTS OF THE PROJECT.
3. LOCATE ALL UNDERGROUND UTILITIES WITHIN THE WORK AREA.
4. INSTALL CONSTRUCTION ENTRANCE, TEMPORARY STAGING AREA AND CONSTRUCTION SAFETY FENCE ACCORDING TO APPROVED E&SC PLAN AND DETAILS.
5. INSPECT EROSION AND SEDIMENTATION CONTROL PRACTICES DAILY AND AFTER SIGNIFICANT RAINFALL EVENTS. MAKE NEEDED REPAIRS IMMEDIATELY.
6. ACQUIRE MATERIALS NEEDED TO COMPLETE THE WORK.
7. COMPLETE CHANNEL WORK AND GRADING TO THE ELEVATIONS AND GRADES SHOWN ON THE PLANS.
8. INSTALL IN-STREAM STRUCTURES AND BANK REVETMENTS.
9. FOLLOW NCDEQ GUIDELINES FOR GROUND COVER AND SOIL STABILIZATION TIMEFRAMES ON SHEET 3.3. INSTALL TEMPORARY AND PERMANENT VEGETATION SHOWN ON SHEET 7.1.
10. SCHEDULE A FINAL SITE INSPECTION WITH THE ENGINEER AND TOWN STAFF.
11. EROSION AND SEDIMENT CONTROL MEASURES SHALL ONLY BE REMOVED AFTER FINAL INSPECTION AND WRITTEN APPROVAL BY THE ENGINEER AND TOWN STAFF.

Jennings Environmental
7 SAMUEL ASHE DRIVE
ASHEVILLE, NC 28805
919.600.4790
NC FIRM LICENSE NO.: P-1932

NORTH CAROLINA PROFESSIONAL SEAL 25454 ENGINEER GREGORY D. JENNINGS

UT MORGAN CREEK STREAM RESTORATION

TOWN OF CARRBORO - 100 PUBLIC WORKS DRIVE, CARRBORO, NC

EROSION AND SEDIMENTATION CONTROL PLAN

FINAL DRAWING

REVISIONS
DATE: 03/09/2020
PLOT SIZE: 11" x 17"
1" = 20'
H.D.: NAD83
V.D.: NAVD88
JE PIN: 5501

3.1

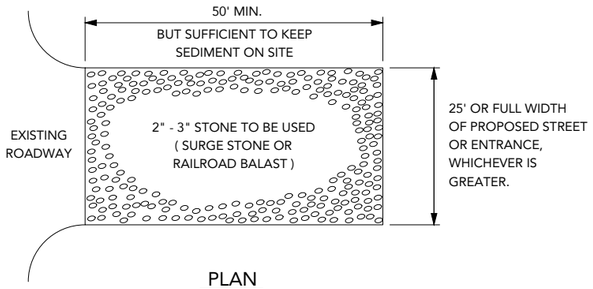

PLAN

NOTES:

1. PUT SILT FENCE OR TREE PROTECTION FENCE UP TO ENSURE CONSTRUCTION ENTRANCE IS USED.
2. IF CONSTRUCTION ON THE SITES ARE SUCH THAT THE MUD IS NOT REMOVED BY THE VEHICLE TRAVELING OVER THE STONE, THEN THE TIRES OF THE VEHICLE MUST BE WASHED BEFORE ENTERING THE PUBLIC ROAD.
3. IF A PROJECT CONTINUES TO PULL MUD AND DEBRIS ON TO THE PUBLIC ROAD, THE GOVERNING AUTHORITY WILL CLEAN THE AREA AND INVOICE THE FINANCIALLY RESPONSIBLE PERSON AS INDICATED ON THE FINANCIAL RESPONSIBILITY FORM.

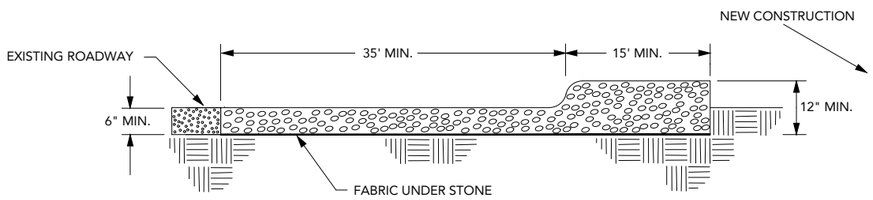

CROSS SECTION

CONSTRUCTION ENTRANCE

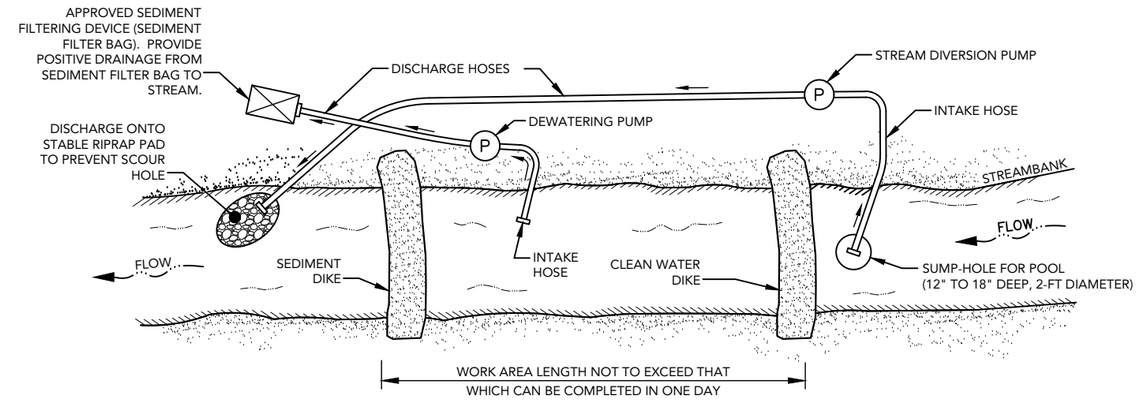

NOTES:

1. SANDBAG DIKES SHALL BE SITUATED AT THE UPSTREAM AND DOWNSTREAM ENDS OF THE WORK AREA, AND STREAM FLOW SHALL BE PUMPED AROUND THE WORK AREA. THE PUMP SHOULD DISCHARGE ONTO A STABLE VELOCITY DISSIPATER CONSTRUCTED OF RIPRAP OR SANDBAGS.
2. WATER FROM THE WORK AREA SHALL BE PUMPED TO A SEDIMENT FILTERING MEASURE SUCH AS A SEDIMENT BAG OR OTHER APPROVED DEVICE. THE MEASURE SHALL BE LOCATED SUCH THAT THE WATER DRAINS BACK INTO THE CHANNEL BELOW THE DOWNSTREAM SANDBAG DIKE WITHOUT CAUSING FURTHER EROSION BETWEEN THE SEDIMENT FILTER BAG AND THE STREAMBANK.
3. THE PUMP MUST RUN CONTINUOUSLY WHILE WORKING IN THE STREAM.
4. STREAMBANKS MUST BE STABILIZED AT THE END OF EACH DAY.

TEMPORARY PUMP AROUND SYSTEM

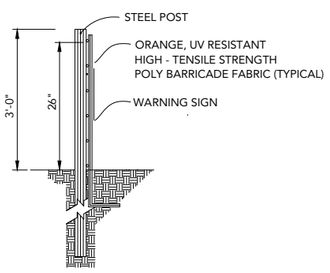

SIDE VIEW

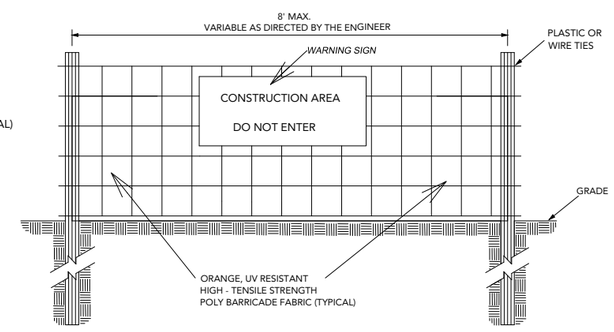

FRONT VIEW

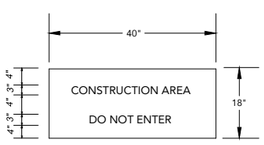

WARNING SIGN DETAIL

NOTES:

1. WARNING SIGNS TO BE MADE OF DURABLE, WEATHERPROOF MATERIAL.
2. LETTERS TO BE 3" HIGH MINIMUM, CLEARLY LEGIBLE AND SPACED AS DETAILED.
3. PLACE A SIGN AT EACH END OF LINEAR SAFETY FENCING AND 50' ON CENTER THEREAFTER.
4. FOR CONSTRUCTION AREAS LESS THAN 200' IN PERIMETER, PROVIDE NO LESS THAN ONE SIGN PER PROTECTION AREA.
5. ATTACH SIGNS SECURELY TO FENCE POSTS AND FABRIC.
6. MAINTAIN SAFETY FENCE THROUGHOUT DURATION OF PROJECT.

CONSTRUCTION SAFETY FENCE

Jennings Environmental
7 SAMUEL ASHE DRIVE
ASHEVILLE, NC 28805
919.600.4790
NC FIRM LICENSE NO.: P-1932

UT MORGAN CREEK STREAM RESTORATION

TOWN OF CARRBORO - 100 PUBLIC WORKS DRIVE, CARRBORO, NC

STABILIZATION AND RE-VEGETATION PLAN

FINAL DRAWING

REVISIONS
DATE: 03/09/2020
PLOT SIZE: 11" x 17"
NTS
H.D.: NAD83
V.D.: NAVD88
JE PIN: 5501

3.2

GROUND STABILIZATION AND MATERIALS HANDLING PRACTICES FOR COMPLIANCE WITH THE NCG01 CONSTRUCTION GENERAL PERMIT

Implementing the details and specifications on this plan sheet will result in the construction activity being considered compliant with the Ground Stabilization and Materials Handling sections of the NCG01 Construction General Permit (Sections E and F, respectively). The permittee shall comply with the Erosion and Sediment Control plan approved by the delegated authority having jurisdiction. All details and specifications shown on this sheet may not apply depending on site conditions and the delegated authority having jurisdiction.

SECTION E: GROUND STABILIZATION

Required Ground Stabilization Timeframes

Site Area Description	Stabilize within this many calendar days after ceasing land disturbance	Timeframe variations
(a) Perimeter dikes, swales, ditches, and perimeter slopes	7	None
(b) High Quality Water (HQW) Zones	7	None
(c) Slopes steeper than 3:1	7	If slopes are 10' or less in length and are not steeper than 2:1, 14 days are allowed
(d) Slopes 3:1 to 4:1	14	-7 days for slopes greater than 50' in length and with slopes steeper than 4:1 -7 days for perimeter dikes, swales, ditches, perimeter slopes and HQW Zones -10 days for Falls Lake Watershed
(e) Areas with slopes flatter than 4:1	14	-7 days for perimeter dikes, swales, ditches, perimeter slopes and HQW Zones -10 days for Falls Lake Watershed unless there is zero slope

Note: After the permanent cessation of construction activities, any areas with temporary ground stabilization shall be converted to permanent ground stabilization as soon as practicable but in no case longer than 90 calendar days after the last land disturbing activity. Temporary ground stabilization shall be maintained in a manner to render the surface stable against accelerated erosion until permanent ground stabilization is achieved.

GROUND STABILIZATION SPECIFICATION

Stabilize the ground sufficiently so that rain will not dislodge the soil. Use one of the techniques in the table below:

Temporary Stabilization	Permanent Stabilization
• Temporary grass seed covered with straw or other mulches and tackifiers • Hydroseeding • Rolled erosion control products with or without temporary grass seed • Appropriately applied straw or other mulch • Plastic sheeting	• Permanent grass seed covered with straw or other mulches and tackifiers • Geotextile fabrics such as permanent soil reinforcement matting • Hydroseeding • Shrubs or other permanent plantings covered with mulch • Uniform and evenly distributed ground cover sufficient to restrain erosion • Structural methods such as concrete, asphalt or retaining walls • Rolled erosion control products with grass seed

POLYACRYLAMIDES (PAMS) AND FLOCCULANTS

1. Select flocculants that are appropriate for the soils being exposed during construction, selecting from the *NC DWR List of Approved PAMS/Flocculants*.
2. Apply flocculants at or before the inlets to Erosion and Sediment Control Measures.
3. Apply flocculants at the concentrations specified in the *NC DWR List of Approved PAMS/Flocculants* and in accordance with the manufacturer's instructions.
4. Provide ponding area for containment of treated Stormwater before discharging offsite.
5. Store flocculants in leak-proof containers that are kept under storm-resistant cover or surrounded by secondary containment structures.

EQUIPMENT AND VEHICLE MAINTENANCE

1. Maintain vehicles and equipment to prevent discharge of fluids.
2. Provide drip pans under any stored equipment.
3. Identify leaks and repair as soon as feasible, or remove leaking equipment from the project.
4. Collect all spent fluids, store in separate containers and properly dispose as hazardous waste (recycle when possible).
5. Remove leaking vehicles and construction equipment from service until the problem has been corrected.
6. Bring used fuels, lubricants, coolants, hydraulic fluids and other petroleum products to a recycling or disposal center that handles these materials.

LITTER, BUILDING MATERIAL AND LAND CLEARING WASTE

1. Never bury or burn waste. Place litter and debris in approved waste containers.
2. Provide a sufficient number and size of waste containers (e.g dumpster, trash receptacle) on site to contain construction and domestic wastes.
3. Locate waste containers at least 50 feet away from storm drain inlets and surface waters unless no other alternatives are reasonably available.
4. Locate waste containers on areas that do not receive substantial amounts of runoff from upland areas and does not drain directly to a storm drain, stream or wetland.
5. Cover waste containers at the end of each workday and before storm events or provide secondary containment. Repair or replace damaged waste containers.
6. Anchor all lightweight items in waste containers during times of high winds.
7. Empty waste containers as needed to prevent overflow. Clean up immediately if containers overflow.
8. Dispose waste off-site at an approved disposal facility.
9. On business days, clean up and dispose of waste in designated waste containers.

PAINT AND OTHER LIQUID WASTE

1. Do not dump paint and other liquid waste into storm drains, streams or wetlands.
2. Locate paint washouts at least 50 feet away from storm drain inlets and surface waters unless no other alternatives are reasonably available.
3. Contain liquid wastes in a controlled area.
4. Containment must be labeled, sized and placed appropriately for the needs of site.
5. Prevent the discharge of soaps, solvents, detergents and other liquid wastes from construction sites.

PORTABLE TOILETS

1. Install portable toilets on level ground, at least 50 feet away from storm drains, streams or wetlands unless there is no alternative reasonably available. If 50 foot offset is not attainable, provide relocation of portable toilet behind silt fence or place on a gravel pad and surround with sand bags.
2. Provide staking or anchoring of portable toilets during periods of high winds or in high foot traffic areas.
3. Monitor portable toilets for leaking and properly dispose of any leaked material. Utilize a licensed sanitary waste hauler to remove leaking portable toilets and replace with properly operating unit.

EARTHEN STOCKPILE MANAGEMENT

1. Show stockpile locations on plans. Locate earthen-material stockpile areas at least 50 feet away from storm drain inlets, sediment basins, perimeter sediment controls and surface waters unless it can be shown no other alternatives are reasonably available.
2. Protect stockpile with silt fence installed along toe of slope with a minimum offset of five feet from the toe of stockpile.
3. Provide stable stone access point when feasible.
4. Stabilize stockpile within the timeframes provided on this sheet and in accordance with the approved plan and any additional requirements. Soil stabilization is defined as vegetative, physical or chemical coverage techniques that will restrain accelerated erosion on disturbed soils for temporary or permanent control needs.

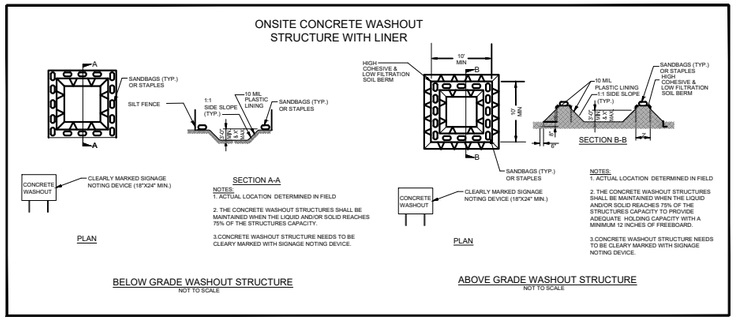

CONCRETE WASHOUTS

1. Do not discharge concrete or cement slurry from the site.
2. Dispose of, or recycle settled, hardened concrete residue in accordance with local and state solid waste regulations and at an approved facility.
3. Manage washout from mortar mixers in accordance with the above item and in addition place the mixer and associated materials on impervious barrier and within lot perimeter silt fence.
4. Install temporary concrete washouts per local requirements, where applicable. If an alternate method or product is to be used, contact your approval authority for review and approval. If local standard details are not available, use one of the two types of temporary concrete washouts provided on this detail.
5. Do not use concrete washouts for dewatering or storing defective curb or sidewalk sections. Stormwater accumulated within the washout may not be pumped into or discharged to the storm drain system or receiving surface waters. Liquid waste must be pumped out and removed from project.
6. Locate washouts at least 50 feet from storm drain inlets and surface waters unless it can be shown that no other alternatives are reasonably available. At a minimum, install protection of storm drain inlet(s) closest to the washout which could receive spills or overflow.
7. Locate washouts in an easily accessible area, on level ground and install a stone entrance pad in front of the washout. Additional controls may be required by the approving authority.
8. Install at least one sign directing concrete trucks to the washout within the project limits. Post signage on the washout itself to identify this location.
9. Remove leavings from the washout when at approximately 75% capacity to limit overflow events. Replace the tarp, sand bags or other temporary structural components when no longer functional. When utilizing alternative or proprietary products, follow manufacturer's instructions.
10. At the completion of the concrete work, remove remaining leavings and dispose of in an approved disposal facility. Fill pit, if applicable, and stabilize any disturbance caused by removal of washout.

HERBICIDES, PESTICIDES AND RODENTICIDES

1. Store and apply herbicides, pesticides and rodenticides in accordance with label restrictions.
2. Store herbicides, pesticides and rodenticides in their original containers with the label, which lists directions for use, ingredients and first aid steps in case of accidental poisoning.
3. Do not store herbicides, pesticides and rodenticides in areas where flooding is possible or where they may spill or leak into wells, stormwater drains, ground water or surface water. If a spill occurs, clean area immediately.
4. Do not stockpile these materials onsite.

HAZARDOUS AND TOXIC WASTE

1. Create designated hazardous waste collection areas on site.
2. Place hazardous waste containers under cover or in secondary containment.
3. Do not store hazardous chemicals, drums or bagged materials directly on the ground.

NORTH CAROLINA PROFESSIONAL SEAL 25454 ENGINEER GREGORY D. JENNINGS

Jennings Environmental
7 SAMUEL ASHE DRIVE
ASHEVILLE, NC 28805
919.600.4790
NC FIRM LICENSE NO.: P-1932

UT MORGAN CREEK STREAM RESTORATION
TOWN OF CARRBORO - 100 PUBLIC WORKS DRIVE, CARRBORO, NC

GROUND STABILIZATION AND MATERIALS HANDLING

FINAL DRAWING

REVISIONS
DATE: 03/09/2020
PLOT SIZE: 11" x 17"
NTS
H.D.: NAD83
V.D.: NAVD88
JE PIN: 5501

3.3

PART III
SELF-INSPECTION, RECORDKEEPING AND REPORTING

SECTION A: SELF-INSPECTION

Self-inspections are required during normal business hours in accordance with the table below. When adverse weather or site conditions would cause the safety of the inspection personnel to be in jeopardy, the inspection may be delayed until the next business day on which it is safe to perform the inspection. In addition, when a storm event of equal to or greater than 1.0 inch occurs outside of normal business hours, the self-inspection shall be performed upon the commencement of the next business day. Any time when inspections were delayed shall be noted in the Inspection Record.

Inspect	Frequency (during normal business hours)	Inspection records must include:
(1) Rain gauge maintained in good working order	Daily	Daily rainfall amounts. If no daily rain gauge observations are made during weekend or holiday periods, and no individual-day rainfall information is available, record the cumulative rain measurement for those un-attended days (and this will determine if a site inspection is needed). Days on which no rainfall occurred shall be recorded as "zero." The permittee may use another rain-monitoring device approved by the Division.
(2) E&SC Measures	At least once per 7 calendar days and within 24 hours of a rain event ≥ 1.0 inch in 24 hours	1. Identification of the measures inspected, 2. Date and time of the inspection, 3. Name of the person performing the inspection, 4. Indication of whether the measures were operating properly, 5. Description of maintenance needs for the measure, 6. Description, evidence, and date of corrective actions taken.
(3) Stormwater discharge outfalls (SDOs)	At least once per 7 calendar days and within 24 hours of a rain event ≥ 1.0 inch in 24 hours	1. Identification of the discharge outfalls inspected, 2. Date and time of the inspection, 3. Name of the person performing the inspection, 4. Evidence of indicators of stormwater pollution such as oil sheen, floating or suspended solids or discoloration, 5. Indication of visible sediment leaving the site, 6. Description, evidence, and date of corrective actions taken.
(4) Perimeter of site	At least once per 7 calendar days and within 24 hours of a rain event ≥ 1.0 inch in 24 hours	If visible sedimentation is found outside site limits, then a record of the following shall be made: 1. Actions taken to clean up or stabilize the sediment that has left the site limits, 2. Description, evidence, and date of corrective actions taken, and 3. An explanation as to the actions taken to control future releases.
(5) Streams or wetlands onsite or offsite (where accessible)	At least once per 7 calendar days and within 24 hours of a rain event ≥ 1.0 inch in 24 hours	If the stream or wetland has increased visible sedimentation or a stream has visible increased turbidity from the construction activity, then a record of the following shall be made: 1. Description, evidence and date of corrective actions taken, and 2. Records of the required reports to the appropriate Division Regional Office per Part III, Section C, Item (2)(a) of this permit of this permit.
(6) Ground stabilization measures	After each phase of grading	1. The phase of grading (installation of perimeter E&SC measures, clearing and grubbing, installation of storm drainage facilities, completion of all land-disturbing activity, construction or redevelopment, permanent ground cover). 2. Documentation that the required ground stabilization measures have been provided within the required timeframe or an assurance that they will be provided as soon as possible.

NOTE: The rain inspection resets the required 7 calendar day inspection requirement.

PART III
SELF-INSPECTION, RECORDKEEPING AND REPORTING

SECTION B: RECORDKEEPING

1. E&SC Plan Documentation

The approved E&SC plan as well as any approved deviation shall be kept on the site. The approved E&SC plan must be kept up-to-date throughout the coverage under this permit. The following items pertaining to the E&SC plan shall be documented in the manner described:

Item to Document	Documentation Requirements
(a) Each E&SC Measure has been installed and does not significantly deviate from the locations, dimensions and relative elevations shown on the approved E&SC Plan.	Initial and date each E&SC Measure on a copy of the approved E&SC Plan or complete, date and sign an inspection report that lists each E&SC Measure shown on the approved E&SC Plan. This documentation is required upon the initial installation of the E&SC Measures or if the E&SC Measures are modified after initial installation.
(b) A phase of grading has been completed.	Initial and date a copy of the approved E&SC Plan or complete, date and sign an inspection report to indicate completion of the construction phase.
(c) Ground cover is located and installed in accordance with the approved E&SC Plan.	Initial and date a copy of the approved E&SC Plan or complete, date and sign an inspection report to indicate compliance with approved ground cover specifications.
(d) The maintenance and repair requirements for all E&SC Measures have been performed.	Complete, date and sign an inspection report.
(e) Corrective actions have been taken to E&SC Measures.	Initial and date a copy of the approved E&SC Plan or complete, date and sign an inspection report to indicate the completion of the corrective action.

2. Additional Documentation

In addition to the E&SC Plan documents above, the following items shall be kept on the site

and available for agency inspectors at all times during normal business hours, unless the Division provides a site-specific exemption based on unique site conditions that make this requirement not practical:

(a) This general permit as well as the certificate of coverage, after it is received.

(b) Records of inspections made during the previous 30 days. The permittee shall record the required observations on the Inspection Record Form provided by the Division or a similar inspection form that includes all the required elements. Use of electronically-available records in lieu of the required paper copies will be allowed if shown to provide equal access and utility as the hard-copy records.

(c) All data used to complete the Notice of Intent and older inspection records shall be maintained for a period of three years after project completion and made available upon request. [40 CFR 122.41]

PART III
SELF-INSPECTION, RECORDKEEPING AND REPORTING

SECTION C: REPORTING

1. Occurrences that must be reported

Permittees shall report the following occurrences:

(a) Visible sediment deposition in a stream or wetland.

(b) Oil spills if:
- They are 25 gallons or more,
- They are less than 25 gallons but cannot be cleaned up within 24 hours,
- They cause sheen on surface waters (regardless of volume), or
- They are within 100 feet of surface waters (regardless of volume).

(a) Releases of hazardous substances in excess of reportable quantities under Section 311 of the Clean Water Act (Ref: 40 CFR 110.3 and 40 CFR 117.3) or Section 102 of CERCLA (Ref: 40 CFR 302.4) or G.S. 143-215.85.

(b) Anticipated bypasses and unanticipated bypasses.

(c) Noncompliance with the conditions of this permit that may endanger health or the environment.

2. Reporting Timeframes and Other Requirements

After a permittee becomes aware of an occurrence that must be reported, he shall contact the appropriate Division regional office within the timeframes and in accordance with the other requirements listed below. Occurrences outside normal business hours may also be reported to the Division's Emergency Response personnel at (800) 662-7956, (800) 858-0368 or (919) 733-3300.

Occurrence	Reporting Timeframes (After Discovery) and Other Requirements
(a) Visible sediment deposition in a stream or wetland	• ***Within 24 hours***, an oral or electronic notification. • ***Within 7 calendar days***, a report that contains a description of the sediment and actions taken to address the cause of the deposition. Division staff may waive the requirement for a written report on a case-by-case basis. • If the stream is named on the NC 303(d) list as impaired for sediment-related causes, the permittee may be required to perform additional monitoring, inspections or apply more stringent practices if staff determine that additional requirements are needed to assure compliance with the federal or state impaired-waters conditions.
(b) Oil spills and release of hazardous substances per Item 1(b)-(c) above	• ***Within 24 hours***, an oral or electronic notification. The notification shall include information about the date, time, nature, volume and location of the spill or release.
(c) Anticipated bypasses [40 CFR 122.41(m)(3)]	• ***A report at least ten days before the date of the bypass, if possible.*** The report shall include an evaluation of the anticipated quality and effect of the bypass.
(d) Unanticipated bypasses [40 CFR 122.41(m)(3)]	• ***Within 24 hours***, an oral or electronic notification. • ***Within 7 calendar days,*** a report that includes an evaluation of the quality and effect of the bypass.
(e) Noncompliance with the conditions of this permit that may endanger health or the environment[40 CFR 122.41(l)(7)]	• ***Within 24 hours***, an oral or electronic notification. • ***Within 7 calendar days***, a report that contains a description of the noncompliance, and its causes; the period of noncompliance, including exact dates and times, and if the noncompliance has not been corrected, the anticipated time noncompliance is expected to continue; and steps taken or planned to reduce, eliminate, and prevent reoccurrence of the noncompliance. [40 CFR 122.41(l)(6). • Division staff may waive the requirement for a written report on a case-by-case basis.

Jennings Environmental
7 SAMUEL ASHE DRIVE
ASHEVILLE, NC 28805
919.600.4790
NC FIRM LICENSE NO.: P-1932

UT MORGAN CREEK STREAM RESTORATION
TOWN OF CARRBORO - 100 PUBLIC WORKS DRIVE, CARRBORO, NC

SELF INSPECTION, RECORD KEEPING AND REPORTING

FINAL DRAWING

REVISIONS
DATE: 03/09/2020
PLOT SIZE: 11" x 17"
NTS
H.D.: NAD83
V.D.: NAVD88
JE PIN: 5501

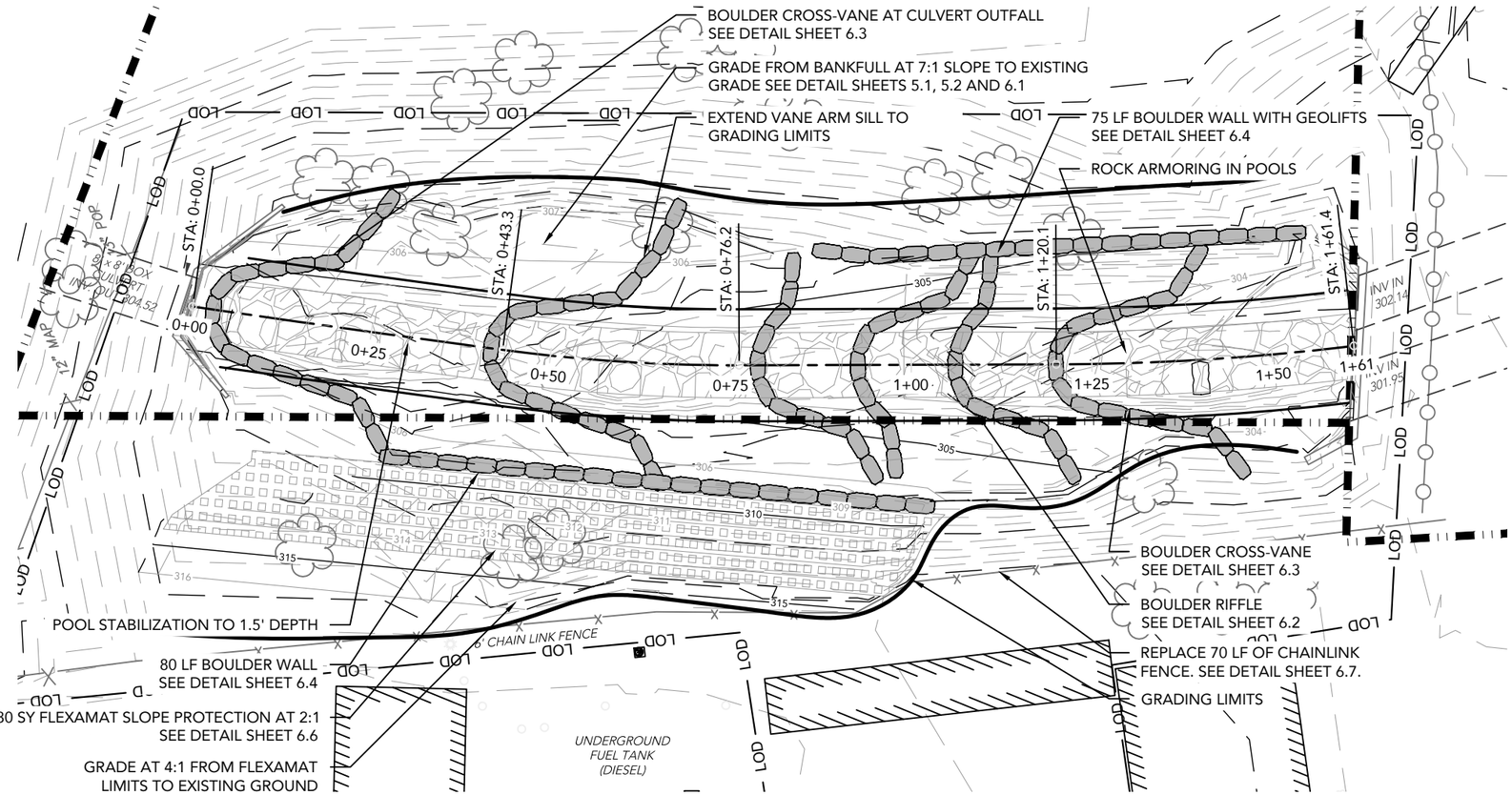

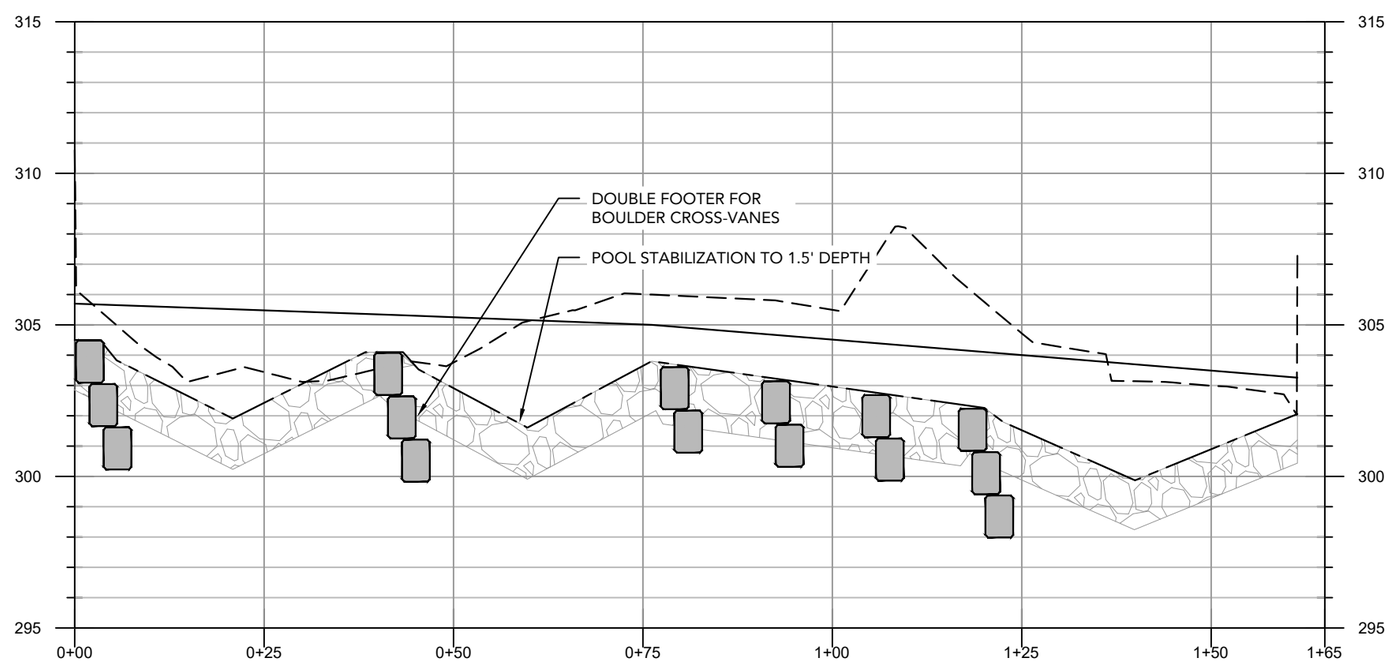

VERTICAL EXAGGERATION = 4:1

Jennings Environmental
7 SAMUEL ASHE DRIVE
ASHEVILLE, NC 28805
919.600.4790
NC FIRM LICENSE NO.: P-1932

UT MORGAN CREEK STREAM RESTORATION

TOWN OF CARRBORO - 100 PUBLIC WORKS DRIVE, CARRBORO, NC

STREAM RESTORATION PLAN AND PROFILE

FINAL DRAWING

REVISIONS
DATE: 03/09/2020
PLOT SIZE: 11" x 17"
1" = 20'
H.D.: NAD83
V.D.: NAVD88
JE PIN: 5501

NORTH CAROLINA PROFESSIONAL SEAL 25454 ENGINEER GREGORY D. JENNINGS

4.1

0+21

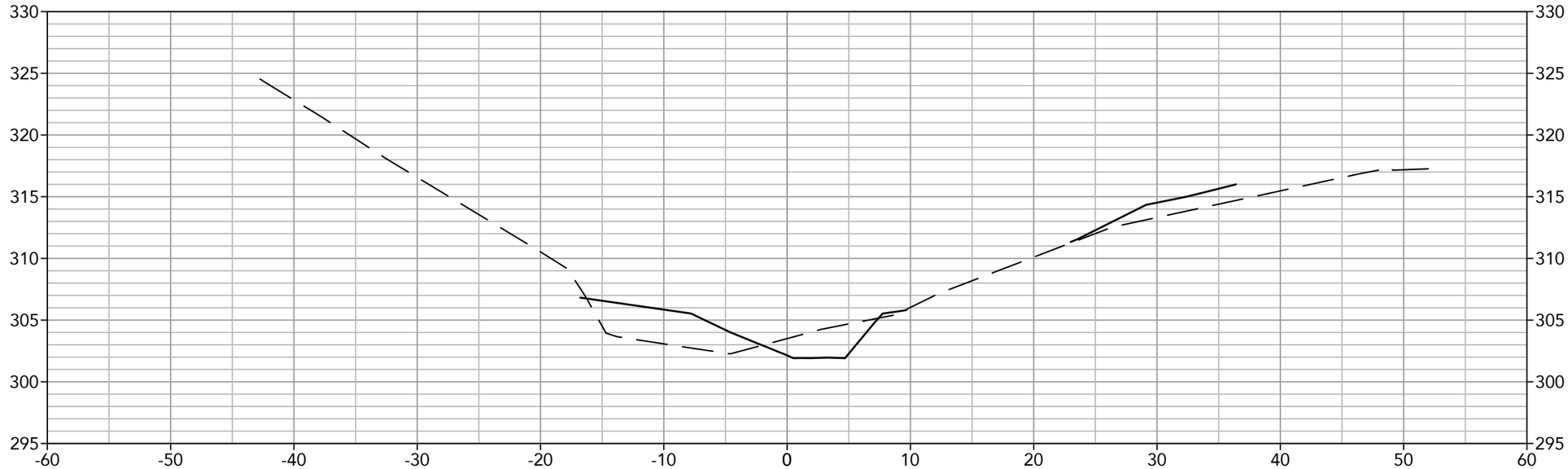

0+60

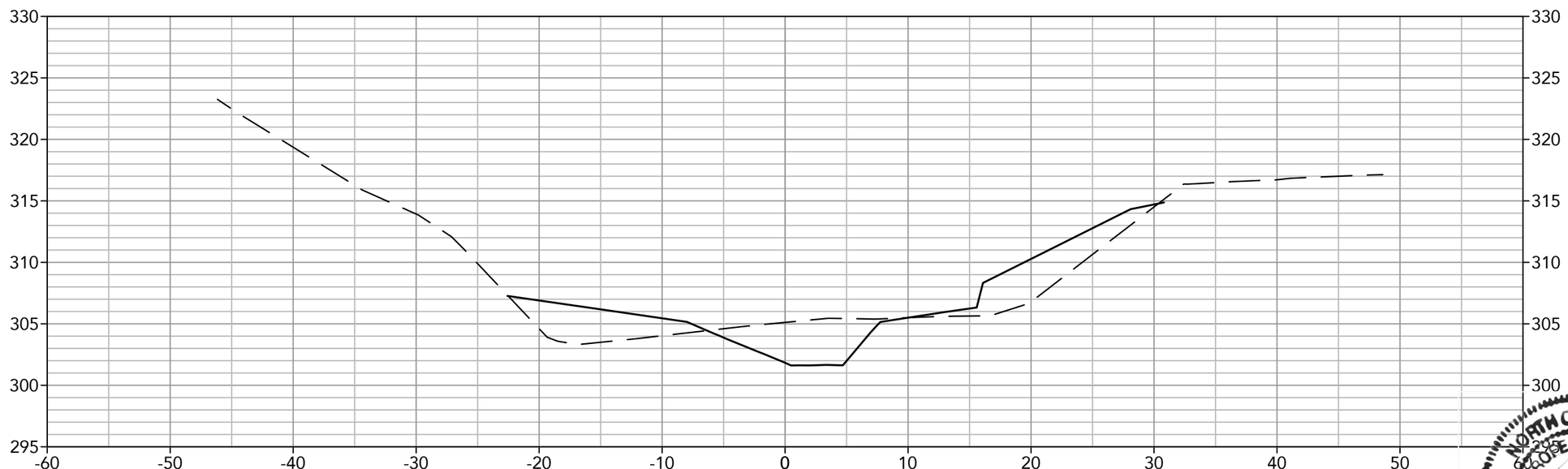

NORTH CAROLINA PROFESSIONAL SEAL 25454 ENGINEER GREGORY D. JENNINGS

Jennings Environmental
7 SAMUEL ASHE DRIVE
ASHEVILLE, NC 28805
919.600.4790
NC FIRM LICENSE NO.: P-1932

UT MORGAN CREEK STREAM RESTORATION

TOWN OF CARRBORO - 100 PUBLIC WORKS DRIVE, CARRBORO, NC

STREAM RESTORATION GRADING SECTIONS 1

FINAL DRAWING

REVISIONS
DATE: 03/09/2020
PLOT SIZE: 11" x 17"
1" = 10'
H.D.: NAD83
V.D.: NAVD88
JE PIN: 5501

5.1

0+90

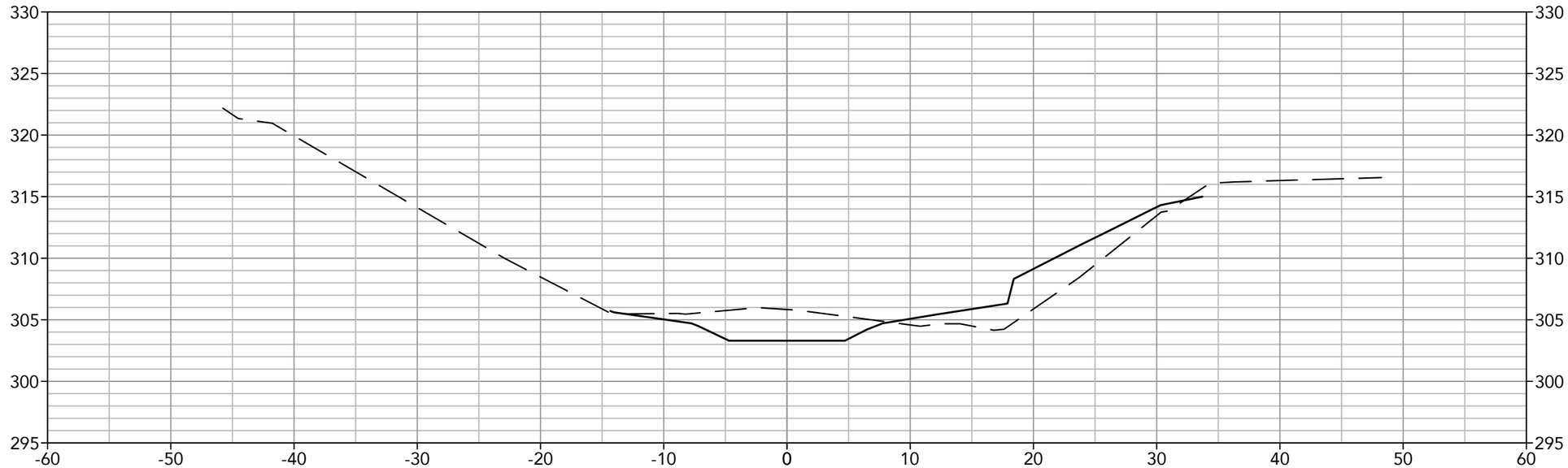

1+40

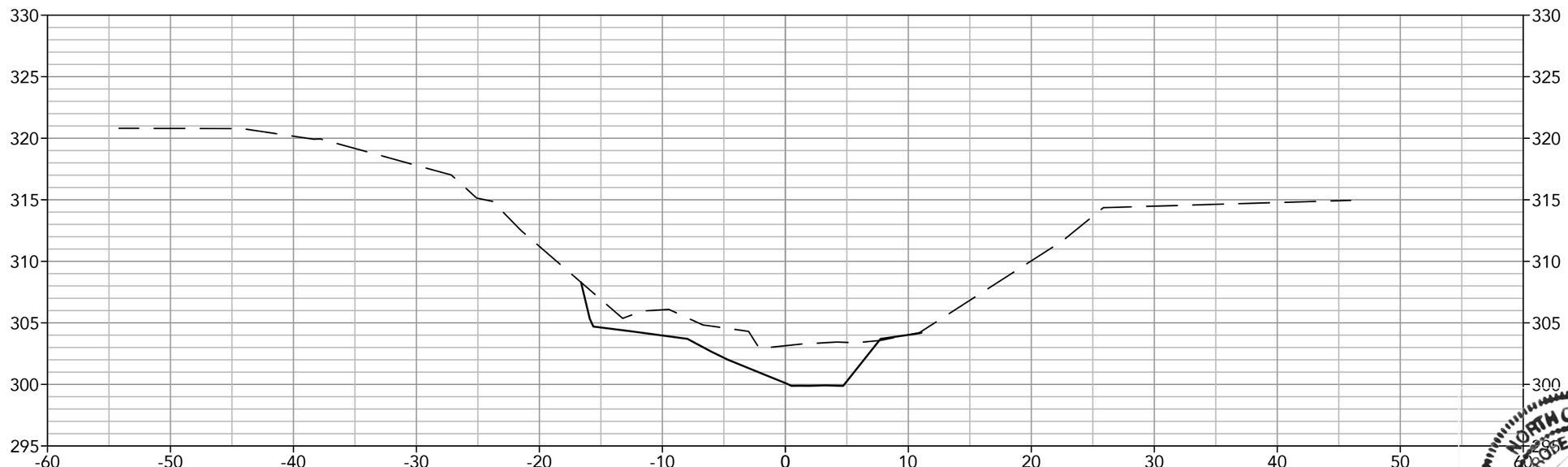

NORTH CAROLINA PROFESSIONAL SEAL 25454 ENGINEER GREGORY D. JENNINGS

Jennings Environmental
7 SAMUEL ASHE DRIVE
ASHEVILLE, NC 28805
919.600.4790
NC FIRM LICENSE NO.: P-1932

UT MORGAN CREEK STREAM RESTORATION

TOWN OF CARRBORO - 100 PUBLIC WORKS DRIVE, CARRBORO, NC

STREAM RESTORATION GRADING SECTIONS 2

FINAL DRAWING

REVISIONS
DATE: 03/09/2020
PLOT SIZE: 11" x 17"
1" = 10'
H.D.: NAD83
V.D.: NAVD88
JE PIN: 5501

5.2

UT MORGAN CREEK CROSS-SECTION NOTES

1. CONSTRUCT UT MORGAN CREEK CROSS-SECTION TO THE LINES, ELEVATIONS AND GRADES SHOWN ON THE PLAN, PROFILE AND DETAILS.

2. CONSTRUCT NEW CHANNEL AND BANKFULL BENCH IN DRY WORKING CONDITIONS USING TEMPORARY PUMP AROUND SYSTEM. INSTALL BOULDER CROSS-VANES AND BOULDER RIFFLES IN THE NEW CHANNEL TO THE ELEVATIONS AND GRADES SHOWN ON THE PLAN, PROFILE AND DETAILS. RE-DRESSING OF CHANNEL AND BANKFULL BENCH/FLOODPLAIN WILL LIKELY BE REQUIRED FOLLOWING INSTALLATION OF IN-STREAM STRUCTURES AND SHALL BE CONSIDERED INCIDENTAL TO CONSTRUCTION.

3. GRADE FROM BANKFULL STAGEAT 7:1 SLOPE TO EXISTING GROUND OR PROPOSED STACKED BOULDER WALL AS SHOWN ON THE PLAN.

4. INSTALL EROSION CONTROL MATTING ON ALL GRADED OR DISTURBED STREAMBANKS.

UT MORGAN CREEK STRUCTURE TABLE			
STA	TW ELV	BKF ELV	FEATURE
0+00.0'	304.5'	305.7'	BOULDER CROSS-VANE
0+42.9'	304.1'	305.3'	BOULDER CROSS-VANE
0+76.2'	303.8'	305.0'	HEAD OF BOULDER RIFFLE
1+20.0'	302.2'	304.1'	TAIL OF BOULDER RIFFLE
1+61.4'	302.1'	303.3'	CULVERT

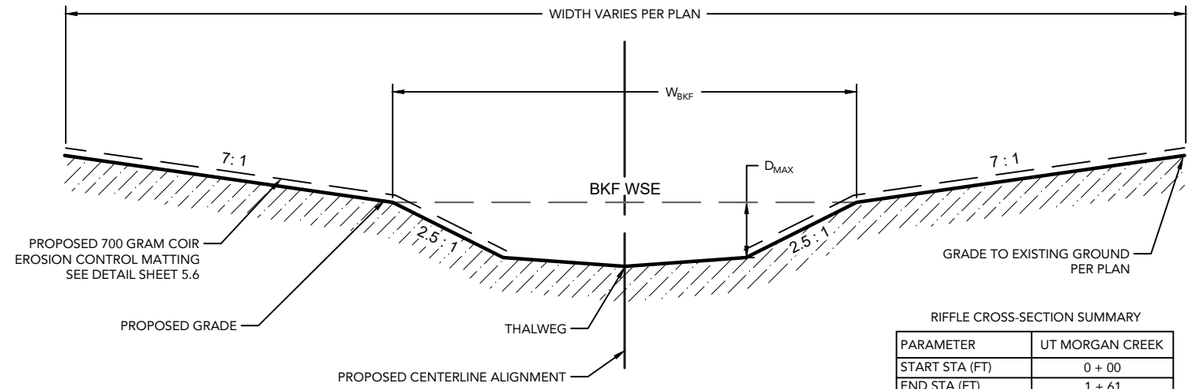

RIFFLE CROSS-SECTION SUMMARY

PARAMETER	UT MORGAN CREEK
START STA (FT)	0 + 00
END STA (FT)	1 + 61
A_{BKF} (FT^2)	15.0
W_{BKF} (FT)	15.4
D_{BKF} (FT)	1.0
D_{MAX} (FT)	1.2
W/D (FT)	16
D_{MAX}/D_{BKF}	1.2

UT MORGAN CREEK
RIFFLE CROSS-SECTION

NOT TO SCALE

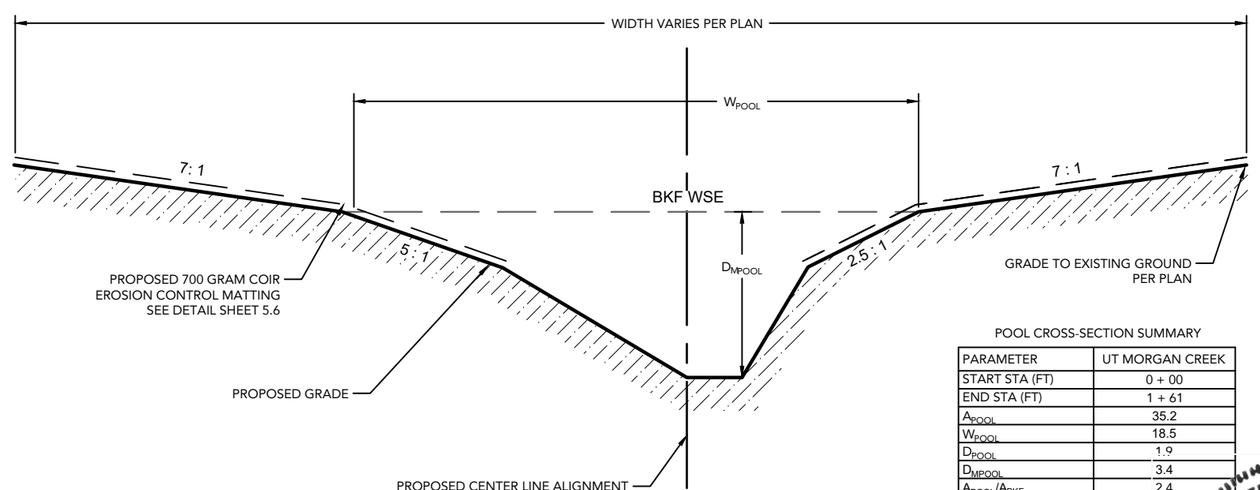

POOL CROSS-SECTION SUMMARY

PARAMETER	UT MORGAN CREEK
START STA (FT)	0 + 00
END STA (FT)	1 + 61
A_{POOL}	35.2
W_{POOL}	18.5
D_{POOL}	1.9
D_{MPOOL}	3.4
A_{POOL}/A_{BKF}	2.4
W_{POOL}/W_{BKF}	1.2
D_{MPOOL}/D_{BKF}	3.5

UT MORGAN CREEK
POOL CROSS-SECTION

NOT TO SCALE

NORTH CAROLINA PROFESSIONAL SEAL 15454 ENGINEER GREGORY D. JENNINGS

Jennings Environmental
7 SAMUEL ASHE DRIVE
ASHEVILLE, NC 28805
919.600.4790
NC FIRM LICENSE NO.: P-1932

UT MORGAN CREEK STREAM RESTORATION
TOWN OF CARRBORO - 100 PUBLIC WORKS DRIVE, CARRBORO, NC

STREAM RESTORATION DETAILS: CHANNEL CROSS-SECTIONS

FINAL DRAWING

REVISIONS
DATE: 03/09/2020
PLOT SIZE: 11" x 17"
NTS
H.D.: NAD83
V.D.: NAVD88
JE PIN: 5501

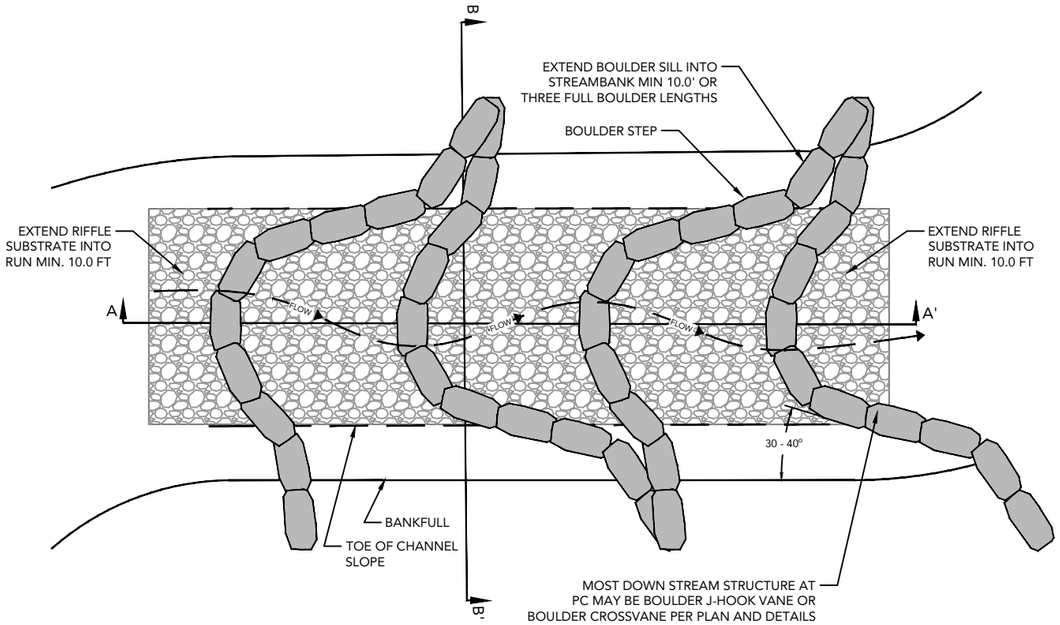

BOULDER RIFFLE
DETAILED PLAN

NOT TO SCALE

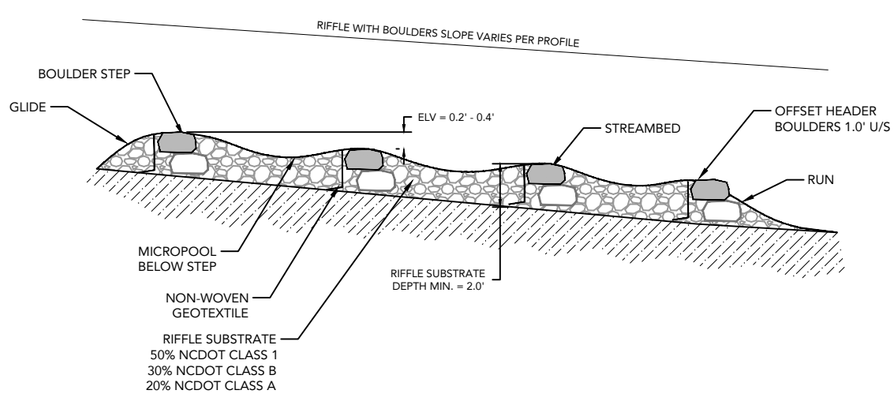

BOULDER RIFFLE
DETAILED CROSS-SECTION A - A'

NOT TO SCALE

BOULDER RIFFLE
NOTES

1. ALL BOULDERS USED FOR THE BOULDER RIFFLE SHALL BE STRUCTURAL STONE, CUBICAL OR RECTANGULAR IN SHAPE. THE ENGINEER MUST APPROVE THE USE OF BOULDERS THAT MAY BE AVAILABLE ONSITE. BOULDERS DIMENSIONS SHALL BE 2.5' x 4.5' x 2.0' (W x L x H) +/- 0.5 FT. THE MINIMUM ACCEPTABLE BOULDER THICKNESS (H) IS 1.5'. BOULDERS LONGER (L) THAN 5.0' WILL BE ACCEPTED.
2. DIMENSIONS AND SLOPES OF STRUCTURES DESCRIBED IN THE DETAIL MAY BE ADJUSTED BY THE ENGINEER TO FIT CONDITIONS ONSITE.
3. CONTRACTOR WILL BE REQUIRED TO FIT BOULDERS TOGETHER TIGHTLY. GAPS BETWEEN BOULDERS SHALL BE MINIMIZED BY FITTING BOULDERS TOGETHER AND PLUGGING WITH NC DOT CLASS A ROCK OR CHINKING STONE APPROVED BY ENGINEER.
4. HEADER BOULDERS SHALL BE UNDERLAIN BY FOOTER BOULDERS TO PROVIDE A FOUNDATION UNLESS OTHERWISE DIRECTED BY THE ENGINEER. HEADER BOULDERS SHALL BE OFFSET 1 FT UPSTREAM OF THE FOOTER BOULDERS WHERE MICROPOOLS ARE ANTICIPATED TO FORM AS SHOWN IN THE DETAIL.
5. SET BOULDER INVERTS AT ELEVATION SHOWN ON THE PLAN AND PROFILE SHEETS. NO ELEVATIONS OF THE BOULDERS MAY VARY FROM THE PLAN SHEETS WITHOUT DIRECTION FROM THE ENGINEER.
6. THE BOULDER ARMS SHALL EXTEND UP TO THE STREAMBANK AT A 1% - 2% SLOPE AND INTO THE STREAMBANK A MINIMUM OF 10.0' OR TWO FULL BOULDER LENGTHS.
7. THE ELEVATION DROP OVER EACH BOULDER STEP IS 0.2' - 0.4'.
8. ON THE UPSTREAM SIDE OF THE BOULDERS, NON-WOVEN GEOTEXTILE FABRIC SHALL BE PLACED ON THE ENTIRE LENGTH OF THE STRUCTURE. FILTER FABRIC SHALL EXTEND FROM THE BOTTOM OF THE FOOTER BOULDER TO THE FINISHED GRADE ELEVATION AND SHALL BE PLACED THE ENTIRE LENGTH OF THE STRUCTURE. RIFFLE MATERIAL SHALL BE USED AS BACKFILL MATERIAL AROUND THE OFFSET BOULDER STEPS AND MICROPOOLS SHALL BE ESTABLISHED BELOW EACH STEP.
9. BOULDER RIFFLES AND POOLS SHALL BE BACKFILLED WITH SUBSTRATE CONSISTING OF QUARRIED STONE - 60% NCDOT CLASS 1, 20% NCDOT CLASS B AND 20% NCDOT CLASS A. RIFFLE SUBSTRATE SHALL BE PLACED AT A UNIFORM THICKNESS SUCH THAT, IN CROSS-SECTION, ITS LOWEST ELEVATION OCCURS IN THE CENTER (THALWEG) OF THE CHANNEL. RIFFLE MATERIAL SHALL BE COMPACTED USING AN EXCAVATOR BUCKET SUCH THAT FUTURE SETTLEMENT OF THE MATERIAL IS KEPT TO A MINIMUM.
10. CONSTRUCTED RIFFLE MATERIAL SHALL EXTEND A MINIMUM OF 10.0 FT U/S OF THE P.T. INTO THE GLIDE AND A MINIMUM OF 10.0 FT D/S OF THE P.C. INTO THE RUN.
11. THE SURFACE OF THIS STRUCTURE SHALL BE FINISHED TO A SMOOTH AND COMPACT SURFACE IN ACCORDANCE WITH THE LINES, GRADES, AND CROSS-SECTIONS OR ELEVATIONS SHOWN ON THE DRAWINGS. THE DEGREE OF FINISH FOR INVERT ELEVATIONS SHALL BE WITHIN 0.1 FT OF THE GRADES AND ELEVATIONS INDICATED.
12. RE-DRESSING OF CHANNEL AND BANKFULL BENCH/FLOODPLAIN WILL LIKELY BE REQUIRED FOLLOWING INSTALLATION OF IN-STREAM STRUCTURES AND SHALL BE CONSIDERED INCIDENTAL TO CONSTRUCTION.
13. SEE TYPICAL RIFFLE CROSS-SECTION FOR CHANNEL FOR DIMENSIONS.

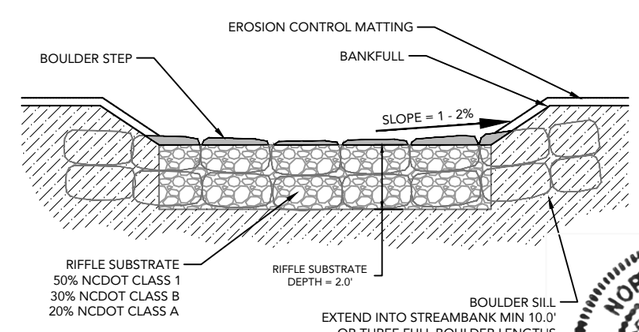

BOULDER RIFFLE
DETAILED CROSS-SECTION B - B'

NOT TO SCALE

NORTH CAROLINA PROFESSIONAL SEAL 26454 ENGINEER GREGORY D. JENNINGS

Jennings Environmental
7 SAMUEL ASHE DRIVE
ASHEVILLE, NC 28805
919.600.4790
NC FIRM LICENSE NO.: P-1932

UT MORGAN CREEK STREAM RESTORATION
TOWN OF CARRBORO - 100 PUBLIC WORKS DRIVE, CARRBORO, NC

STREAM RESTORATION DETAILS: BOULDER RIFFLE

FINAL DRAWING

REVISIONS
DATE: 03/09/2020
PLOT SIZE: 11" x 17"
NTS
H.D.: NAD83
V.D.: NAVD88
JE PIN: 5501

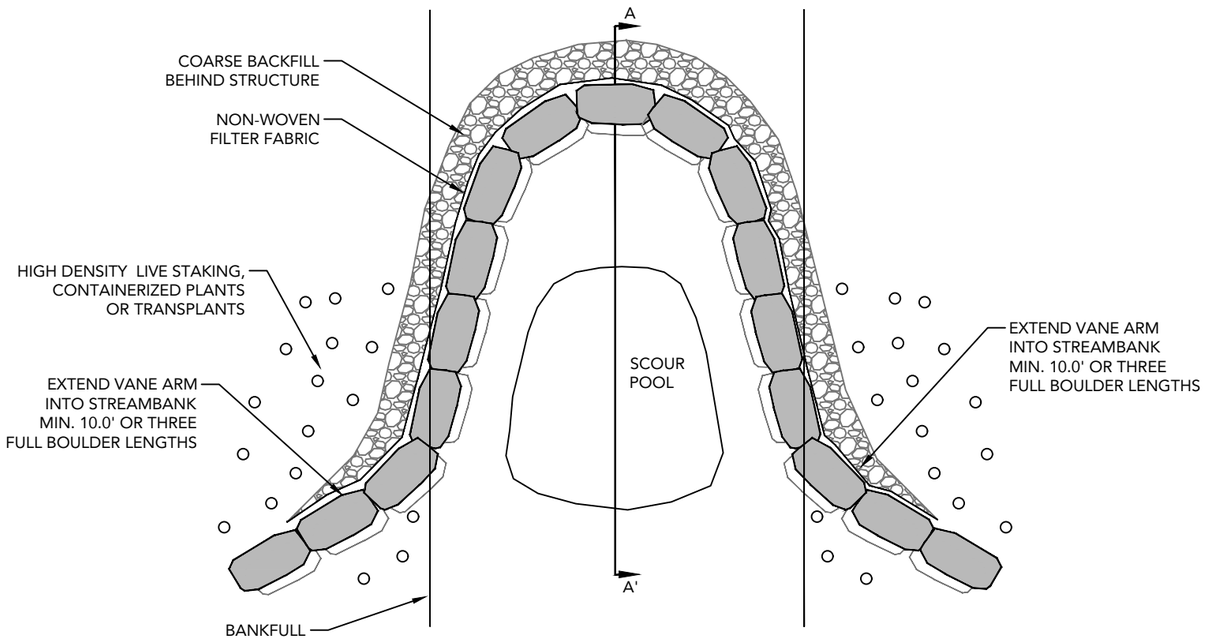

BOULDER J-HOOK VANE
DETAILED PLAN

NOT TO SCALE

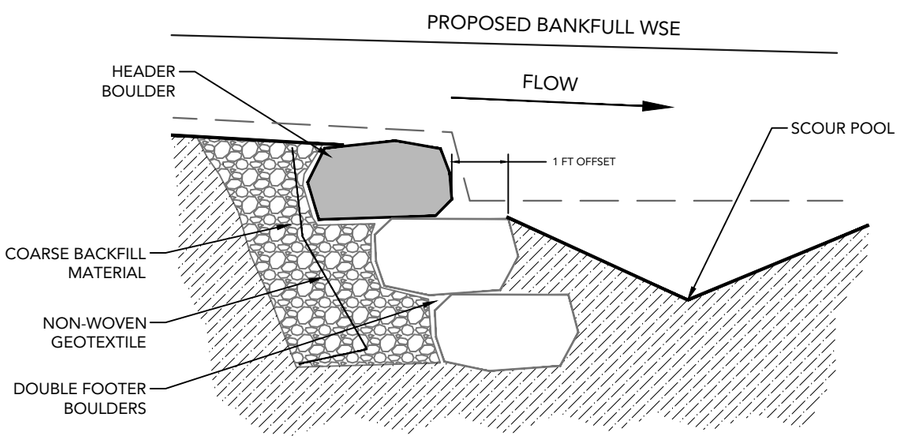

BOULDER CROSS VANE
SECTION A - A'

NOT TO SCALE

BOULDER CROSS VANE
NOTES

1. ALL BOULDERS USED FOR THE PROPOSED STRUCTURE SHALL BE STRUCTURAL STONE, CUBICAL OR RECTANGULAR IN SHAPE. THE ENGINEER MUST APPROVE THE USE OF BOULDERS THAT MAY BE AVAILABLE ONSITE. BOULDERS DIMENSIONS SHALL BE 2.5' x 4.5' x 2.0' (W x L x H) +/- 0.5 FT. THE MINIMUM ACCEPTABLE BOULDER THICKNESS (H) IS 1.5'. BOULDERS LONGER (L) THAN 5.0' WILL BE ACCEPTED.

2. DIMENSIONS AND SLOPES OF STRUCTURES DESCRIBED IN THE DETAIL MAY BE ADJUSTED BY DESIGN ENGINEER TO FIT CONDITIONS ONSITE.

3. CONTRACTOR WILL BE REQUIRED TO FIT BOULDERS TOGETHER TIGHTLY.

4. GAPS BETWEEN BOULDERS SHALL BE MINIMIZED BY FITTING BOULDERS TOGETHER AND PLUGGING WITH NC DOT CLASS A ROCK OR CHINKING STONE APPROVED BY ENGINEER.

2. HEADER BOULDERS SHALL BE UNDERLAIN BY TWO (2) ROWS OF FOOTER BOULDERS TO PROVIDE A FOUNDATION UNLESS OTHERWISE DIRECTED BY THE ENGINEER. HEADER BOULDERS SHALL BE OFFSET 1.0 FT UPSTREAM OF THE FOOTER BOULDERS.

3. THE ENGINEER MAY ADJUST THE POSITION OF THE STRUCTURE IN THE FIELD SUCH THE VANE ARMS ARE SLIGHTLY OFFSET. THIS SHALL BE CONSIDERED INCIDENTAL TO CONSTRUCTION.

4. SET BOULDER INVERTS AT ELEVATION SHOWN ON THE PLAN AND PROFILE SHEETS. NO ELEVATIONS OF THE BOULDERS MAY VARY FROM THE PLAN SHEETS WITHOUT DIRECTION FROM THE ENGINEER.

5. NON-WOVEN GEOTEXTILE SHALL BE PLACED ON THE UPSTREAM SIDE OF THE STRUCTURE TO PREVENT WASHOUT OF SEDIMENT THROUGH BOULDER GAPS. FILTER FABRIC SHALL EXTEND FROM THE BOTTOM OF THE FOOTER BOULDER TO THE FINISHED GRADE ELEVATION AND SHALL BE PLACED THE ENTIRE LENGTH OF THE STRUCTURE. SELECT BACK FILL MATERIAL SHALL BE PLACED UPSTREAM OF THE GEOTEXTILE MATERIAL.

6. SELECT BACKFILL MATERIAL SHALL BE FILL MATERIAL GENERATED ON-SITE WITH A MINIMUM D_{50} OF 60 MM OR A GRADATION SUBMITTED IN WRITING AND APPROVED BY THE ENGINEER. A WELL-GRADED BLEND OF NCDOT CLASS A RIP-RAP AND ASTM #57 ROCK MIXED WITH EARTH WILL BE AN ACCEPTABLE SUBSTITUTE. SELECT BACKFILL AND SOIL BACKFILL MATERIAL SHALL BE COMPACTED SUCH THAT FUTURE SETTLEMENT OF THE MATERIAL IS KEPT TO A MINIMUM.

7. THE SURFACE OF THIS STRUCTURE SHALL BE FINISHED TO A SMOOTH AND COMPACT SURFACE IN ACCORDANCE WITH THE LINES, GRADES, AND CROSS-SECTIONS OR ELEVATIONS SHOWN ON THE DRAWINGS. THE DEGREE OF FINISH FOR INVERT ELEVATIONS SHALL BE WITHIN 0.1 FT OF THE GRADES AND ELEVATIONS INDICATED.

8. RE-DRESSING OF CHANNEL AND BANKFULL BENCH/FLOODPLAIN WILL LIKELY BE REQUIRED FOLLOWING INSTALLATION OF IN-STREAM STRUCTURES AND SHALL BE CONSIDERED INCIDENTAL TO CONSTRUCTION.

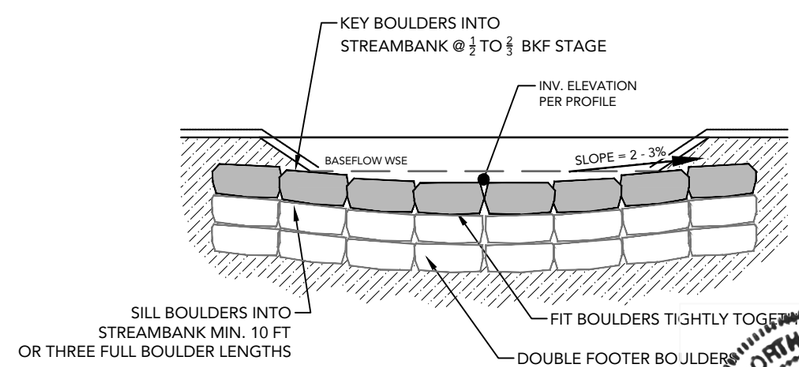

BOULDER CROSS VANE
CROSS-SECTION

NOT TO SCALE

NORTH CAROLINA PROFESSIONAL SEAL 25454 ENGINEER GREGORY D. JENNINGS

Jennings Environmental
7 SAMUEL ASHE DRIVE
ASHEVILLE, NC 28805
919.600.4790
NC FIRM LICENSE NO.: P-1932

UT MORGAN CREEK STREAM RESTORATION
TOWN OF CARRBORO - 100 PUBLIC WORKS DRIVE, CARRBORO, NC

STREAM RESTORATION DETAILS: BOULDER CROSS VANE

FINAL DRAWING

REVISIONS
DATE: 03/09/2020
PLOT SIZE: 11" x 17"
NTS
H.D.: NAD83
V.D.: NAVD88
JE PIN: 5501

6.3

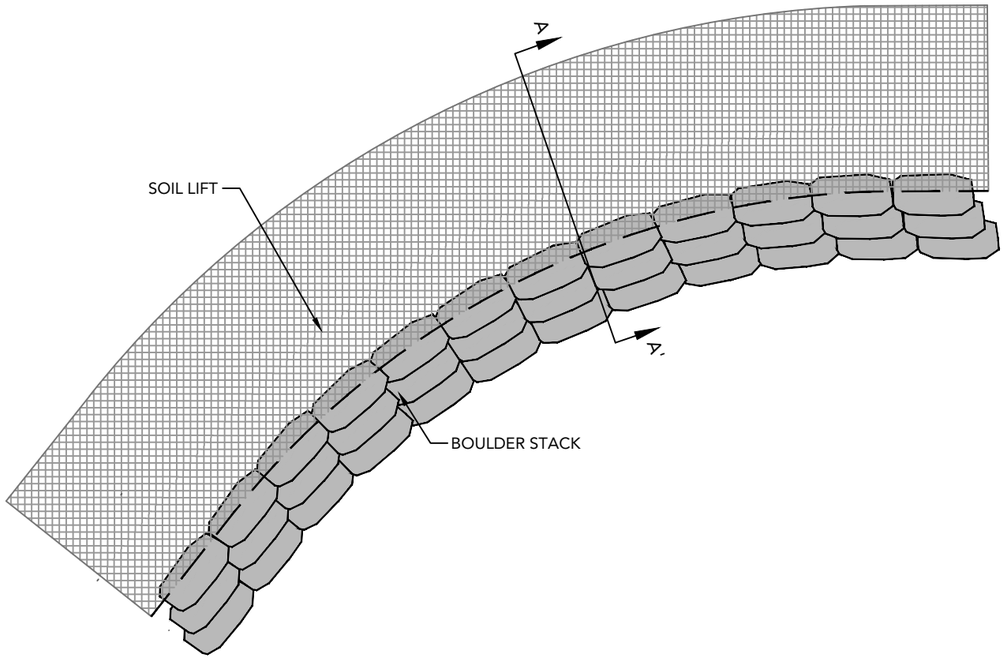

BOULDER WALL
DETAILED PLAN

NOT TO SCALE

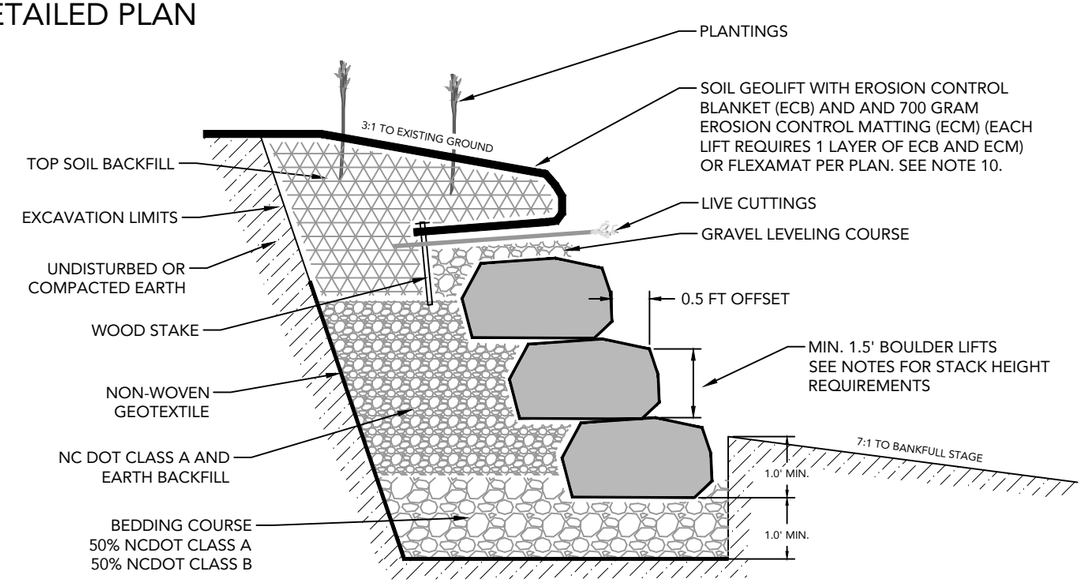

BOULDER WALL
DETAILED PROFILE - SECTION A - A'

NOT TO SCALE

BOULDER WALL
NOTES

1. ALL BOULDERS SHALL BE STRUCTURAL STONE, CUBICAL OR RECTANGULAR IN SHAPE. BOULDERS AVAILABLE ONSITE MAY BE USED IF APPROVED BY THE ENGINEER. BOULDERS SHALL BE 2.5' x 4.5' x 2.0' (W x L x H) +/- 0.5 FT. THE MINIMUM ACCEPTABLE BOULDER THICKNESS (H) IS 1.5'. BOULDERS LONGER (L) THAN 5.0' WILL BE ACCEPTED.

2. A BEDDING COURSE CONSISTING OF 50% NCDOT CLASS A AND 50% NCDOT CLASS B SHALL BE INSTALLED BELOW THE FIRST ROW OF BOULDERS. IF BEDROCK IS ENCOUNTERED ONSITE, THE FIRST LIFT OF BOULDERS SHALL BE PLACED DIRECTLY ON THE BEDROCK. THE FIRST ROW OF BOULDERS SHALL EXTEND BELOW THE BANKFULL BENCH ELEVATION A MINIMUM OF 1.0'. ALL BOULDERS SHALL FIT TIGHTLY TOGETHER. INSTALL EACH LIFT OF BOULDERS WITH A 0.5' SETBACK FROM THE FRONT EDGE OF THE PREVIOUS LIFT OF BOULDERS.

3. GRAVEL LEVELING COURSE SHALL BE INSTALLED ABOVE THE HIGHEST ELEVATION OF THE BOULDERS BEFORE REBUILDING THE STREAMBANK.

4. THE SOIL BACKFILL USED FOR LIFTS AND TOPSOIL USED FOR LAYERING WITH THE LIVE BRANCHES SHALL BE FREE OF ANY LARGE ROOTS OR WOODY DEBRIS AND SHALL GENERALLY BE FREE FROM ANY GRAVEL OR COBBLE MATERIAL.

5. SOIL BACKFILL SHALL BE COMPACTED SUCH THAT FUTURE SETTLING WILL BE KEPT TO A MINIMUM.

6. PLACE A LAYER OF 6.5 FEET WIDE 700 GRAM EROSION CONTROL MATTING, OR EQUIVALENT, ON TOP OF THE BOULDER WALL AND GRAVEL LEVELING COURSE SUCH THAT 2.5 FEET OF THE BLANKET WILL BE BURIED BELOW THE SOIL BACKFILL.

7. SOIL CAN BE COMPACTED BY STACKING A PIECE OF 2 X 6 SAWN LUMBER EDGEWAYS AND SECURING WITH WOODEN STAKES.

8. THE EROSION CONTROL FABRIC SHALL BE PULLED AS TIGHT AS POSSIBLE WITHOUT TEARING OR EXCESSIVELY DISTORTING THE FABRIC.

9. SECURE THE EROSION CONTROL AND NON-WOVEN MATTING IN PLACE BY STAKING THE END OF THE EROSION CONTROL FABRIC WITH WOODEN STAKES ON 1.5-FOOT CENTERS.

10. SOIL GEOLIFT SHALL ONLY BE INSTALLED WITH STACKED BOULDER WALL ON THE LEFT BANK OF THE STREAM. FLEXAMAT (OR EQUIV.) SHALL BE INSTALLED WITH THE STACKED BOULDER WALL ON THE RIGHT BANK OF THE STREAM.

11. THE SURFACE OF THIS STRUCTURE SHALL BE FINISHED TO A SMOOTH AND COMPACT SURFACE IN ACCORDANCE WITH THE LINES, GRADES, AND CROSS-SECTIONS OR ELEVATIONS SHOWN ON THE DRAWINGS. THE DEGREE OF FINISH FOR ELEVATIONS SHALL BE WITHIN 0.1 FT OF THE GRADES AND ELEVATIONS INDICATED OR APPROVED BY THE ENGINEER.

12. RE-DRESSING OF CHANNEL AND BANKFULL BENCH/FLOODPLAIN WILL LIKELY BE REQUIRED FOLLOWING INSTALLATION OF IN-STREAM STRUCTURES AND SHALL BE CONSIDERED INCIDENTAL TO CONSTRUCTION.

Jennings Environmental
7 SAMUEL ASHE DRIVE
ASHEVILLE, NC 28805
919.600.4790
NC FIRM LICENSE NO.: P-1932

UT MORGAN CREEK STREAM RESTORATION
TOWN OF CARRBORO - 100 PUBLIC WORKS DRIVE, CARRBORO, NC

STREAM RESTORATION DETAILS: BOULDER WALL

FINAL DRAWING

REVISIONS
DATE: 03/09/2020
PLOT SIZE: 11" x 17"
NTS
H.D.: NAD83
V.D.: NAVD88
JE PIN: 5501

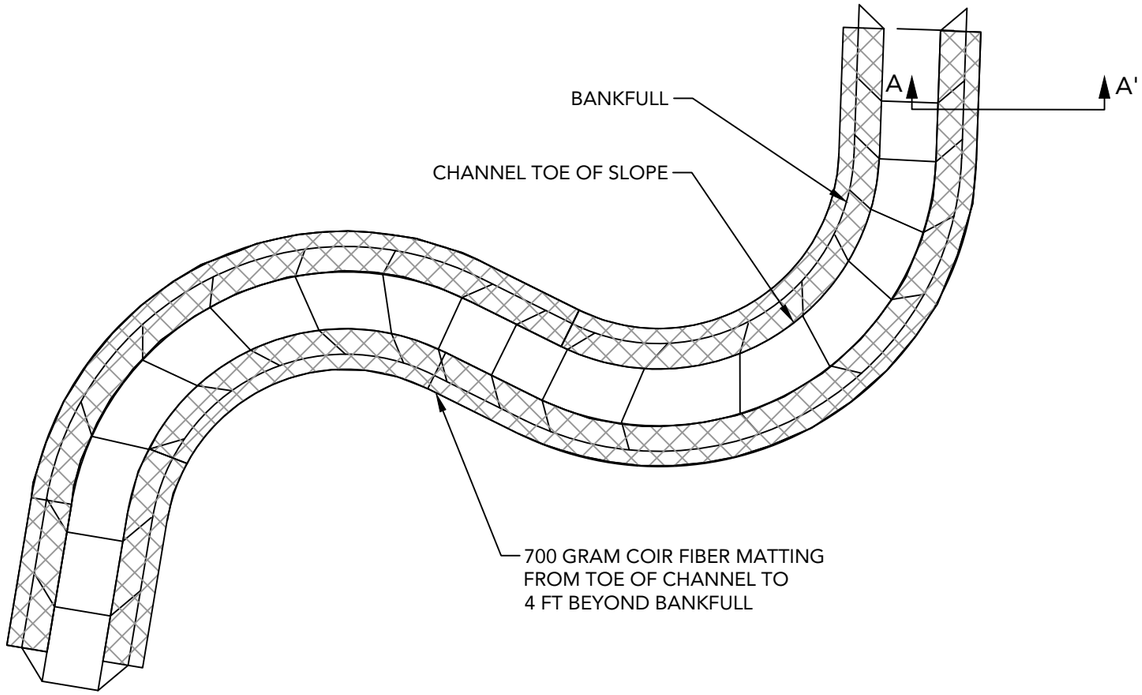

EROSION CONTROL MATTING
DETAILED PLAN

NOT TO SCALE

EROSION CONTROL MATTING
NOTES

1. EROSION CONTROL MATTING IS USED TO PROTECT RECENTLY CONSTRUCTED STREAMBANKS FROM EROSION. THE MATTING WILL REMAIN INTACT WHILE THE BANK AND RIPARIAN VEGETATION MATURES, PROVIDING CRITICAL BANK PROTECTION.
2. BEFORE INSTALLING COIR FIBER MATTING, RAKE SOIL LEVEL, ADD TEMPORARY AND PERMANENT SEED, FERTILIZER, LIME AND MULCH.
3. 700 GRAM COIR FIBER EROSION CONTROL MATTING SHALL BE PLACED ALONG THE LENGTH OF THE NEW CHANNEL FROM THE TOE OF SLOPE OUT TO A MINIMUM OF 4.0' BEYOND THE BANKFULL ELEVATION.
4. SECURE COIR MATTING IN PLACE BY STAKING AND OVERLAPPING AT THE SEEMS WITH A SHINGLE-TYPE METHOD SUCH THAT THE OVERLAPPING PIECE IS IN THE SAME DIRECTION AND AS THE STREAM FLOW. ADDITIONAL STAKING SHALL BE APPLIED BY THE CONTRACTOR AT NO ADDITIONAL COST IF THE MATTING SEPARATES FROM THE SOIL MORE THAN ONE INCH UNDER A REASONABLE PULL.

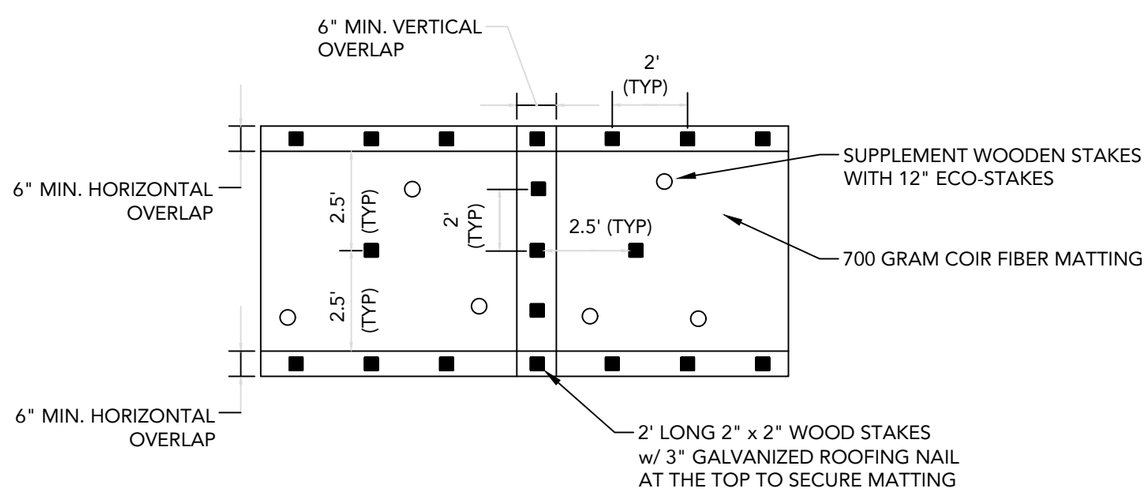

EROSION CONTROL MATTING
DETAILED STAKING PLAN

NOT TO SCALE

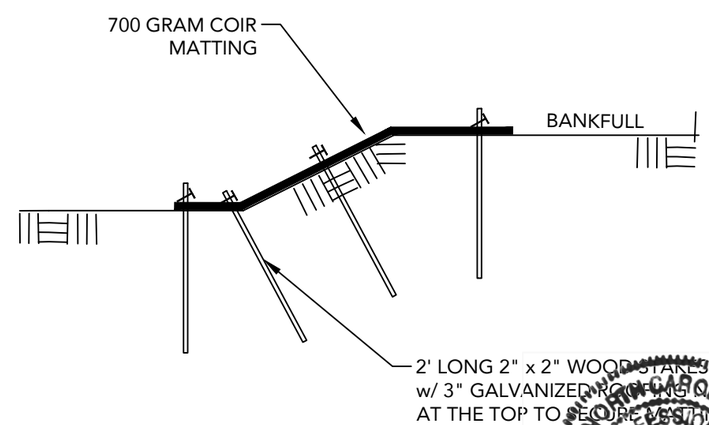

EROSION CONTROL MATTING
DETAILED CROSS-SECTION A - A'

NOT TO SCALE

NORTH CAROLINA PROFESSIONAL SEAL 26454 ENGINEER GREGORY D. JENNINGS

Jennings Environmental
7 SAMUEL ASHE DRIVE
ASHEVILLE, NC 28805
919.600.4790
NC FIRM LICENSE NO.: P-1932

UT MORGAN CREEK STREAM RESTORATION
TOWN OF CARRBORO - 100 PUBLIC WORKS DRIVE, CARRBORO, NC

STREAM RESTORATION DETAILS: EROSION CONTROL MATTING

FINAL DRAWING

REVISIONS
DATE: 03/09/2020
PLOT SIZE: 11" x 17"
NTS
H.D.: NAD83
V.D.: NAVD88
JE PIN: 5501

SIDE PROFILE - RIVERBANK

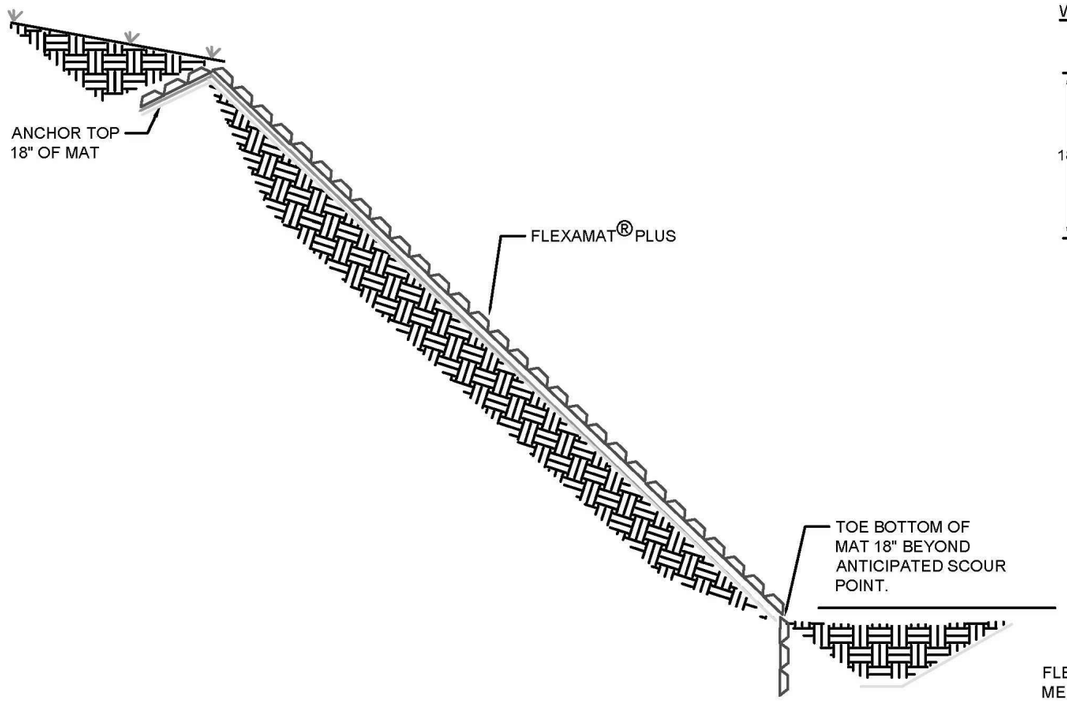

PROFILE VIEW
PERPENDICULAR OVERLAPS

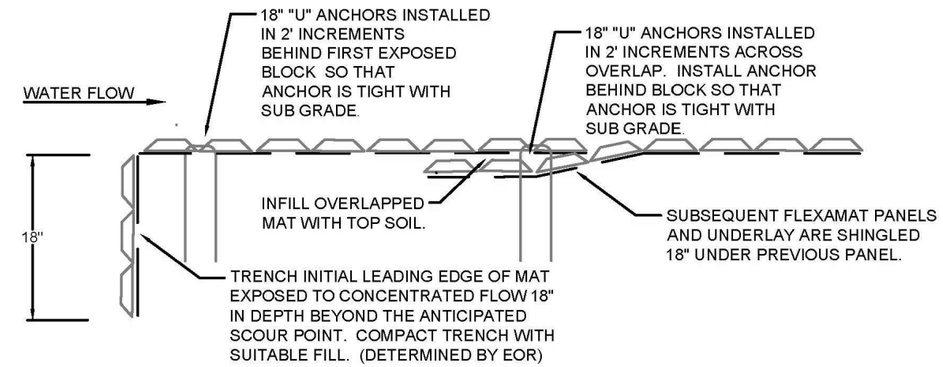

LONGITUDINAL SEAM PROFILE

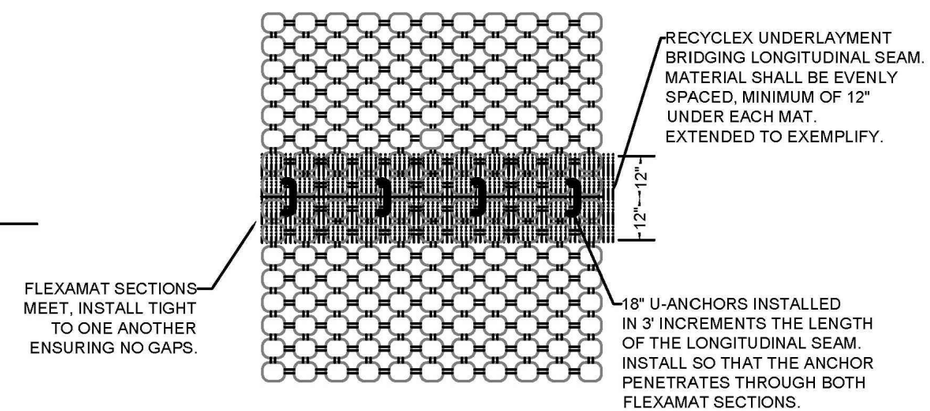

FLEXAMAT INFORMATION

Manufacturer:	Motz Enterprises, Inc.
Product Name:	Flexamat®
Address:	3153 Madison Road Cincinnati, Ohio 45209
Telephone:	513-772-MOTZ (6689)
Fax:	513-772-6690
Email:	Info@Flexamat.com
Website:	www.Flexamat.com

CONSTRUCTION NOTES:

1. THE RIVER BANK SUBGRADE MUST BE STABLE, UNIFORMLY GRADED, FREE OF ROCKS, ROOTS, AND OTHER DEBRIS.
2. SITE SPECIFIC SEED MIXES, INCLUDING NATIVE GRASSES, SHOULD BE INSTALLED ON THE PREPARED SUB GRADE PRIOR TO INSTALLING THE FLEXAMAT EROSION CONTROL MATERIALS.
3. THE TOP EDGE OF THE FLEXAMAT SHOULD BE A MINIMUM OF 3' ABOVE THE EXPECTED HIGH WATER ELEVATION OF THE RIVER AND THE BOTTOM EDGE SHOULD BE A MINIMUM OF 4' BELOW THE EXPECTED LOW WATER ELEVATION. FOR APPLICATIONS WHERE WATER DEPTH IS BELOW 4', MAT SHALL EXTEND 2' PAST THE TOE.
4. FLEXAMAT IS AVAILABLE IN WIDTHS OF 4', 5.5', 8', 10', 12', AND 16'.
   - 4.1. FOR WIDTHS WIDER THAN 16', INSTALL MATS ADJACENT TO ONE ANOTHER. BRIDGE LONGITUDINAL SEAM WITH 48" UNDERLAYMENT. 24" OF UNDERLAYMENT SHALL BE UNDER EACH MAT AND DIRECTLY AGAINST THE SUBGRADE.
   - 4.2. FLIP FLEXAMAT SECTIONS BACK INTO PLACE SO THAT THEY FIT TIGHTLY.
   - 4.3. SECURE FLEXAMAT TO SEAM BY INSTALLING U-ANCHORS IN 3' INCREMENTS THE LENGTH OF THE LONGITUDINAL SEAM. U-ANCHORS CONSIST OF #3 REBAR BENT INTO A U WITH 18" LEGS.
5. THE INITIAL LEADING EDGE OF FLEXAMAT EXPOSED TO FLOW SHALL BE EMBEDDED 24" VERTICALLY BEYOND THE ANTICIPATED SCOUR POINT. THE ANCHOR TRENCH SHALL BE FILLED AND COMPACTED WITH SUITABLE FILL OR OTHER (AS SPECIFIED BY EOR).
6. FOR ADDITIONAL SECTIONS OF MAT, OVERLAP THE DOWNSTREAM SECTION 18" WITH UPSTREAM SECTION OF MAT. PRIOR TO INSTALLING OVERLAP, FLIP UPSTREAM MAT BACK 24". EXCAVATE 2.25" OF SOIL 18" FROM END OF UPSTREAM MAT. DOWNSTREAM SECTION IS LAID IN THE SHALLOW TRENCH. LIGHTLY SPREAD TOPSOIL OVER INITIAL EDGE. FLIP END OF UPSTREAM MAT OVER THE SOIL COVERED INITIAL LEADING EDGE OF DOWNSTREAM MAT.
7. INSTALL 18" "U" ANCHORS IN 2' INCREMENTS ACROSS THE OVERLAP. INSTALL ANCHORS DIRECTLY BEHIND BLOCKS. "U" ANCHORS CONSIST OF #3 REBAR "U" ANCHOR WITH 18" LEGS.
8. AT THE END OF THE ARMORED STREAM BANK, EMBED THE MAT 24" PAST THE ANTICIPATED SCOUR POINT IN A TERMINATION TRENCH. THE ANCHOR TRENCH SHALL BE FILLED AND COMPACTED WITH SUITABLE FILL OR OTHER (AS SPECIFIED BY EOR).

Jennings Environmental
7 SAMUEL ASHE DRIVE
ASHEVILLE, NC 28805
919.600.4790
NC FIRM LICENSE NO.: P-1932

UT MORGAN CREEK STREAM RESTORATION
TOWN OF CARRBORO - 100 PUBLIC WORKS DRIVE, CARRBORO, NC

STREAM RESTORATION DETAILS: FLEXAMAT

FINAL DRAWING

REVISIONS
DATE: 03/09/2020
PLOT SIZE: 11" x 17"
NTS
H.D.: NAD83
V.D.: NAVD88
JE PIN: 5501

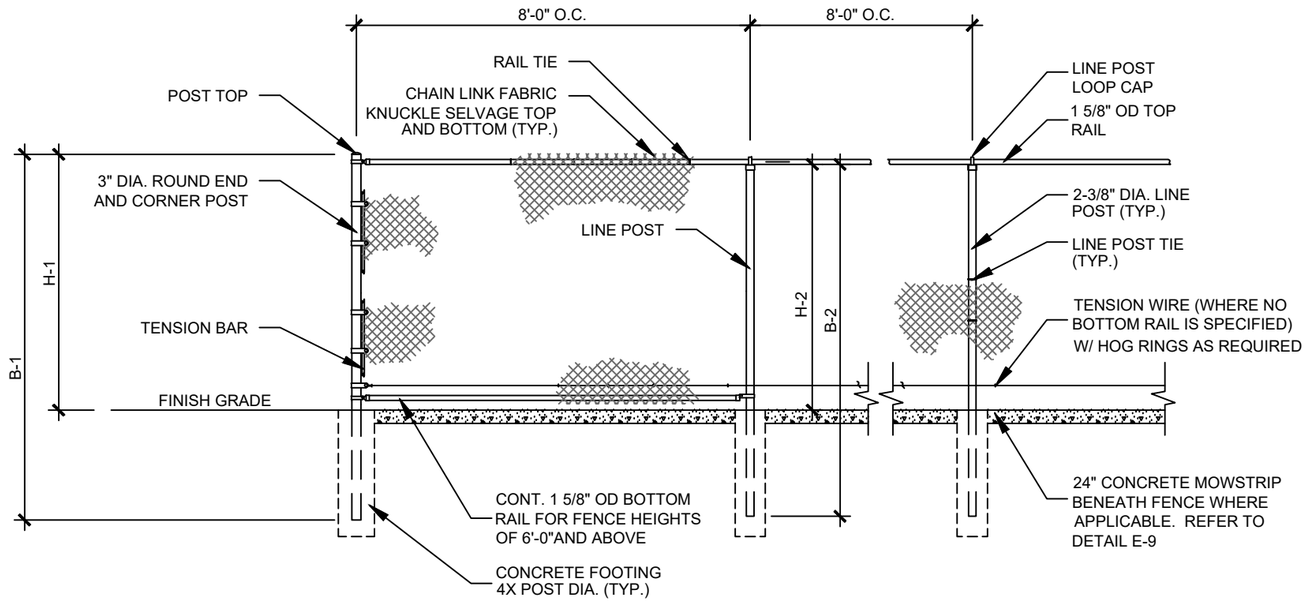

TYPICAL FENCE LAYOUT

FENCE HEIGHT	END & CORNER POSTS		LINE POSTS	
NOMINAL HEIGHT	B-1 BAR LENGTH	H-1 HEIGHT ABOVE GRADE	B-2 BAR LENGTH	H-2 HEIGHT ABOVE GRADE
4'-0"	7'-0"	4'-0 5/8"	6'-8"	3'-8 7/8"
6'-0"	9'-0"	6'-0 5/8"	8'-8"	5'-8 7/8"
8'-0"	11'-0"	8'-0 5/8"	10'-8"	7'-8 7/8"
10'-0"	13'-0"	10'-0 5/8"	12'-8"	9'-8 7/8"
12'-0"	15'-0"	12'-0 5/8"	14'-8"	11'-8 7/8"

POST CAP	TOP & BOTTOM FABRIC DETAIL
DOME	KNUCKLE

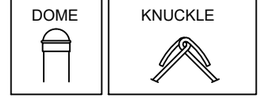

GENERAL NOTES:

1. FOOTING WIDTH TO BE (4)X POST WIDTH.
2. ALL MATERIAL TO CONFORM TO FEDERAL SPEC RR-F-191G (1-25-74).
3. ALL GALVANIZED FITTINGS TO CONFORM TO ASTM-A153.
4. ALL FENCE COMPONENTS TO BE GALVANIZED.
5. POST AND RAIL SIZES MAY REQUIRE MODIFICATION TO MEET SPECIFIC PROJECT REQUIREMENTS.

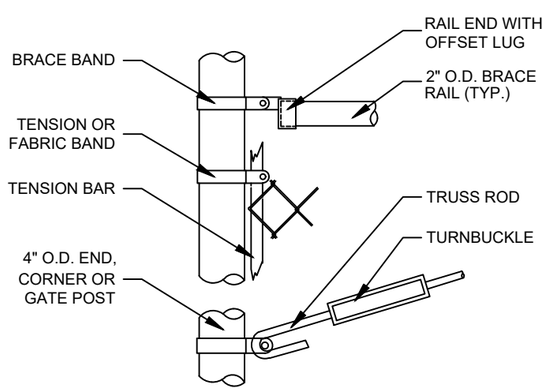

END, CORNER, OR GATE POST ELEVATION

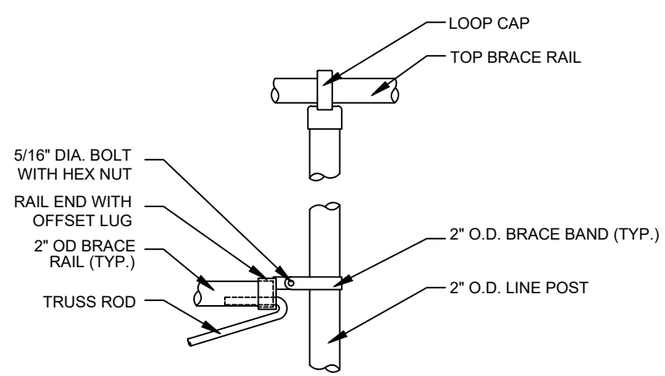

LINE POST ELEVATION

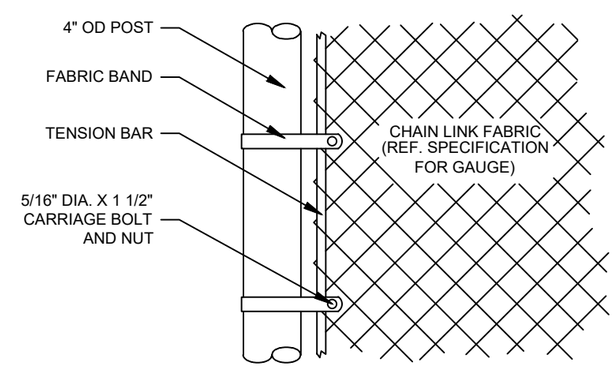

FABRIC CONNECTION

Jennings Environmental
7 SAMUEL ASHE DRIVE
ASHEVILLE, NC 28805
919.600.4790
NC FIRM LICENSE NO.: P-1932

UT MORGAN CREEK STREAM RESTORATION
TOWN OF CARRBORO - 100 PUBLIC WORKS DRIVE, CARRBORO, NC

STREAM RESTORATION DETAILS: CHAIN LINK FENCE

FINAL DRAWING

REVISIONS
DATE: 03/09/2020
PLOT SIZE: 11" x 17"
NTS
H.D.: NAD83
V.D.: NAVD88
JE PIN: 5501

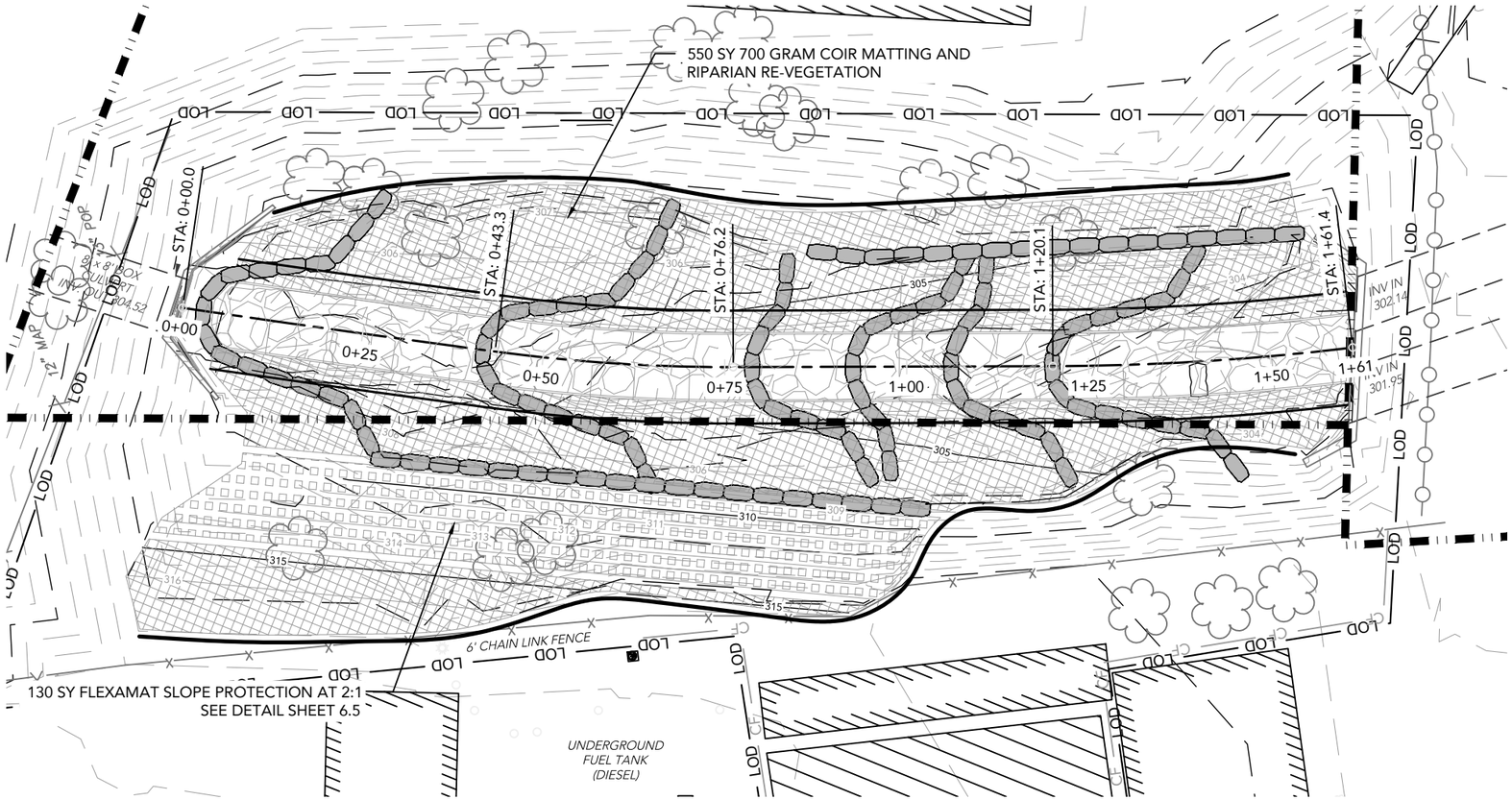

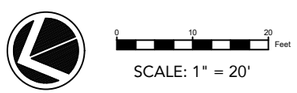

SCALE: 1" = 20'

GENERAL RE-VEGETATION PLAN NOTES

1. SOIL PREPARATION ELEMENTS, TEMPORARY AND PERMANENT SEED AND GROUND COVER SHALL BE SPREAD OVER ALL AREAS WITHIN THE LOD THAT ARE DISTURBED DURING CONSTRUCTION.
2. SLOPES STABILIZED WITH FLEXAMAT SHALL RECEIVE THE SAME TEMPORARY AND PERMANENT SEEDING APPLICATION AND RATE AS OTHER DISTURBED RIPARIAN AREAS ON THE SITE. NOT LIVE STAKES OR BARE ROOTS SHALL BE PLANTED THROUGH THE FLEXAMAT.
3. LIVE STAKES, BARE ROOT STOCK AND CONTAINERIZED PLANTS SHALL BE LOCATED WHERE SHOWN ON PLAN.
4. ADJUSTMENTS TO THE VEGETATION PLAN SHALL BE MADE ONLY IF APPROVED BY THE TOWN OR ENGINEER.

TEMPORARY SEEDING AND MULCHING

5. ALL SEED AND SEED VARIETIES MUST BE OF FROM STATE AND FEDERALLY LISTED NOXIOUS WEED SEED.
6. ALL DISTURBED AREAS WILL BE SEEDED WITH TEMPORARY SEED AND MULCHED WITH WHEAT STRAW. SEEDING WILL BE PERFORMED USING A BROADCAST SPREADER. OTHER METHODS MAY BE USED BUT MUST BE APPROVED BY ENGINEER IN ADVANCE OF INSTALLATION.
7. MAINTENANCE OF SEEDED AREAS SHALL CONSIST OF WATERING, WEED AND PEST CONTROL, FERTILIZATION, EROSION REPAIR, RESEEDING, AND INCIDENTAL OPERATIONS AS NECESSARY TO ESTABLISH A HEALTHY, VIGOROUS, WEED FREE AND DISEASE FEE UNIFORM STAND OF GRASS. ALL AREAS WHICH FAIL TO SHOW A UNIFORM STAND OF GRASS FOR ANY REASON SHALL BE TREATED REPEATEDLY UNTIL A UNIFORM STAND OF AT LEAST 90% COVERAGE IS ATTAINED WITH NO BARE AREA GREATER THAN FIVE SQUARE FEET.

PERMANENT SEEDING

8. PERMANENT SEEDING SHALL OCCUR IN CONJUNCTION WITH TEMPORARY SEEDING WHERE APPLICABLE. IDEALLY, PERMANENT SEEDING SHALL OCCUR DURING THE PLANTING SEASON FOR EACH SEED TYPE. AREAS FERTILIZED FOR TEMPORARY SEEDING SHALL BE SUFFICIENTLY FERTILIZED FOR PERMANENT SEEDING; ADDITIONAL FERTILIZER IS NOT REQUIRED FOR PERMANENT SEEDING.
9. ALL SEED AND SEED VARIETIES MUST BE OF FROM STATE AND FEDERALLY LISTED NOXIOUS WEED SEED. IN ADDITION, NONE OF THE FOLLOWING SEED WILL OCCUR IN THE MIX.
10. THE CONTRACTOR SHALL LOOSEN THE SOIL TO A MINIMUM DEPTH OF 4-INCHES AND GRADE TO A SMOOTH, EVEN SURFACE WITH A LOOSE, UNIFORMLY FINE TEXTURE. THE AREAS TO BE SEEDED ARE THEN TO BE ROLLED AND RAKED TO REMOVE RIDGES AND FILL DEPRESSIONS TO MEET FINISH GRADES. THE CONTRACTOR IS TO LIMIT SUB GRADE AND FINISH GRADE PREPARATION TO AREAS THAT WILL BE PLANTED IMMEDIATELY. PREPARED AREAS ARE TO BE RESTORED IF ERODED OR OTHERWISE DISTURBED AFTER FINE GRADING AND BEFORE PLANTING.
11. SEED SHALL BE SOWN WITH A SPREADER OR A SEEDING MACHINE. SEED IS NOT TO BE BROADCAST OR DROPPED WHEN WIND VELOCITY EXCEEDS 5 MPH. SEED SHALL BE EVENLY DISTRIBUTED BY SOWING IN TWO DIRECTIONS AT RIGHT ANGLES TO EACH OTHER. WET SEED OR SEED THAT IS MOLDY OR OTHERWISE DAMAGED IN TRANSIT OR STORAGE IS NOT TO BE USED. AFTER BEGIN SOWN, THE SEED SHALL BE RAKED INTO THE TOP 1/9 INCH OF THE TOPSOIL, LIGHTLY ROLLED, AND WATERED WITH FINE SPRAY. SEEDED AREAS ON STREAM BANKS SHALL BE PROTECTED WITH COIR FIBER MATTING.

BARE ROOTS

12. ALLOW BARE ROOTS TO SOAK IN WATER AN HOUR OR TWO BEFORE PLANTING. DO NOT SOAK THE ROOTS FOR MORE THAN 24 HOURS.
13. DIG A PLANTING PIT THAT IS THREE (3) TIMES WIDER THAN THE TREE'S CURRENT ROOT SYSTEM. SPREAD OUT ROOTS TO ENCOURAGE OUTWARD GROWTH.
14. KEEP THE TREE VERTICAL IN THE PLANTING PIT (PERPENDICULAR TO THE GROUND) SO THAT IT GROWS STRAIGHT.
15. REFILL THE PIT WITH NATIVE SOIL (WHAT WAS REMOVED AT DIGGING TIME), AND ANY OTHER SOIL AMENDMENTS.
16. GENTLY TAMP OUT ANY AIR POCKETS FROM THE SOIL ONCE THE PLANTING HOLE IS FILLED.

LIVE STAKES

17. LIVE STAKES MUST BE DORMANT WHEN CUT. KEEP LIVE STAKES MOIST UNTIL PLANTING. THE STAKE SHOULD BE PREPARED WITH THE BUDS POINTED UP, AND THE BOTTOM SHOULD BE CUT AT AN ANGLE FOR EASY INSERTION INTO THE GROUND.
18. LIVE STAKES SHOULD BE PLACED WITH $\frac{2}{3}$ TO $\frac{3}{4}$ OF THE LENGTH OF THE STAKE BELOW GROUND AND ANGLED DOWNSTREAM. ENSURE THE BASE OF THE LIVE STAKE WILL REACH THE WATER TABLE.
19. AN IRON BAR CAN BE USED TO MAKE A PILOT HOLE TO PREVENT BARK FROM BEING DAMAGED DURING INSTALLATION.
20. INSERT LIVE STAKES POINTED END FIRST INTO THE STREAMBANK.

Jennings Environmental
7 SAMUEL ASHE DRIVE
ASHEVILLE, NC 28805
919.600.4790
NC FIRM LICENSE NO.: P-1932

UT MORGAN CREEK STREAM RESTORATION
TOWN OF CARRBORO - 100 PUBLIC WORKS DRIVE, CARRBORO, NC

STABILIZATION AND RE-VEGETATION PLAN

FINAL DRAWING

REVISIONS
DATE: 03/09/2020
PLOT SIZE: 11" x 17"
AS NOTED
H.D.: NAD83
V.D.: NAVD88
JE PIN: 5501

7.1

RE-VEGETATION - 680 SY

TEMPORARY SEEDING SCHEDULE AND RATES		
DATE	TYPE	APPLICATION RATE (LBS/AC)
JAN 1 - MAY 1	RYE GRAIN	120
	GROUND AGRICULTURAL LIMESTON	2,000
	10-10-10 FERTILIZER	750
	STRAW MULCH	4,000
MAY 1 - AUG 15	GERMAN MILLET	50
	GROUND AGRICULTURAL LIMESTON	2,000
	10-10-10 FERTILIZER	750
	STRAW MULCH	4,000
AUG 15 - DEC 30	RYE GRAIN	120
	GROUND AGRICULTURAL LIMESTON	2,000
	10-10-10 FERTILIZER	750
	STRAW MULCH	4,000

PERMANENT SEEDING SCHEDULE AND RATES - 30 LBS PER ACRE		
SPECIES	COMMON NAME	PERCENT
Agrostis perennans	AUTUMN BENTGRASS	15
Andropogon gerardii	BIG BLUESTEM	10
Coreopsis lanceolata	LANCELEAF COREOPSIS	10
Elymus virginicus	VIRGINIA WILDRYE	20
Juncus effusus	SOFT RUSH	5
Panicum virgatum	SWITCHGRASS	15
Rudbeckia hirta	BLACKEYED SUSAN	10
Schizachyrium scoparium	LITTLE BLUESTEM	5
Sorghastrum nutans	INDIAN GRASS	5
Tripsacum dactyloides	EASTERN GAMAGRASS	5
		100

LIVE STAKES AND BARE ROOTS - 4' O.C.		
SPECIES	COMMON NAME	QUANTITY
Cornus amomum	SILKY DOGWOOD	75
Salix sericea	SILKY WILLOW	75
Alnus serrulata	TAG ALDER	50
Betula nigra	RIVER BIRCH	50
Plantanus occidentalis	SYCAMORE	25
Liriodendron tulipifera	TULIP POPLAR	25
Lindera benzoin	SPICE BUSH	25
Cephalanthus occidentialis	BUTTON BUSH	25
		350

Jennings Environmental
7 SAMUEL ASHE DRIVE
ASHEVILLE, NC 28805
919.600.4790
NC FIRM LICENSE NO.: P-1932

UT MORGAN CREEK STREAM RESTORATION
TOWN OF CARRBORO - 100 PUBLIC WORKS DRIVE, CARRBORO, NC

STABILIZATION AND RE-VEGETATION SPECIFICATIONS

FINAL DRAWING

REVISIONS
DATE: 03/09/2020
PLOT SIZE: 11" x 17"
NTS
H.D.: NAD83
V.D.: NAVD88
JE PIN: 5501